SITE DRAWINGS

JSC BEVELCLAD Bevel Back Weatherboards Flexible Underlay 20mm Cavity Fix

ISSUE : 12/02/2024 | VERSION : 2.4

JSC PREMIUM ARCHITECTURAL & BUILDING SOLUTIONS

TYPE	DRAWING SCALE	ISSUE DATE
BEVEL BACK WB - 20MM CAVITY FIX	1:2 @ A4	12/02/2024
NAME: COVER SHEET	DRAWING NUMBER: JSC 20CF BC01	VERSION: 2.4

- TO BE READ IN CONJUNCTION WITH COMPLETE JSC BEVELCLAD SYSTEM LITERATURE
- DETAILS MAY BE SUBJECT CHANGE WITHOUT NOTICE

CodeMark CMNZ30082

INDEX

ISSUE : 12/02/2024 | VERSION : 2.4

GENERAL NOTES

ISSUE : 12/02/2024 | VERSION : 2.4

OVERVIEW :

JSC BevelClad is a cavity based external wall cladding system comprising of:

- timber weatherboards finished with high quality exterior grade coatings
- H3.2 treated timber castellated cavity battens
- fascia boards and moulding profiles

This documentation covers the fixing instructions for the installation of JSC Bevel Back weatherboards over JSC-U 20mm thick castellated cavity battens.

The information is this document has been specifically grouped in 2 different layouts to help Architects, Designers & Builders on site.

1. **A3/A1 ARCHITECTURAL DRAWINGS:**
   Similar details are grouped to make up a completed A1/A3 drawings make it easier it easier to import into the project plan.
2. **A4 SITE DRAWINGS**
   Same information is made available on a A4 page at a larger scale for builders making it easier to read and distribute the drawings on site.

SCOPE OF USE

- This document is for use exclusively within the scope of JSC BevelClad Bevel Back Weatherboard Cladding System technical documentation and Code Compliance CodeMark certificate CMNZ30082.
- Details are subject to change without notification and only the current version is compliant.
- Refer to www.jsc.co.nz at the time of use for the current documentation.
- The designer/specifier must be satisfied that these details are applicable for their intended use.

FIXING SPECIFICATION

SPECIES	FIXINGS MATERIAL
Western Red Cedar	316 Stainless Steel or Silicon Bronze annular grooved nails
Alaskan Yellow Cedar	316 Stainless Steel or Silicon Bronze annular grooved nails
Iroko	316 Stainless Steel or Silicon Bronze annular grooved nails
Radiata Pine / Nordic Pine	316 Stainless Steel or Silicon Bronze annular grooved nails
JSC-TMT® Thermally Modified Timber	
TMT TAIGA (RW/WW)	316 Stainless Steel annular grooved nails
TMT TAXON	316 Stainless Steel annular grooved nails
TMT TUSCAN	316 Stainless Steel annular grooved nails
TMT AMBA	316 Stainless Steel annular grooved nails

LEGEND:

- (AJ) ALUMINIUM JOINERY: Selected double glazed aluminium joinery. To E2/AS1 9.1.10
- (BW) BUILDING WRAP: Flexible Wall Underlay, As per NZBC E2/AS1 - Table 23, In extra high wind zones, Rigid Underlay required (9.1.7.2 E2/AS1)
- (CB1) CAVITY BATTEN - NON STRUCTURAL : Horizontally installed JSC-U 45mm x 20mm Radiata Pine H3.2 treated, both face castellated and 18° bevelled edges.
- (CB2) CAVITY BATTEN - NON STRUCTURAL : Vertically installed JSC-U 45mm x 20mm Radiata Pine H3.2 treated, both face castellated and 18° bevelled edges. Site machined to allow for flashing.
- (CC) CAVITY CLOSURE: Cavity closure strip, positioned to give a 15mm min. drip edge to cladding
- (FT1) FLASHING TAPE: Flashing tape over wrap 70mm (50 min) turn-down required in corners only. Refer to Fig. 72 of NZBC E2/AS1
- (FT2) FLEXIBLE FLASHING TAPE: Flexible flashing tape lapped over aluminium head flashing or 2nd layer of Building Wrap, taped joint to top of timber frame
- (HF) HEAD FLASHING: Aluminium head flashing with minimum 15 degree fall, optional hemmed edges as per table 7 E2/AS1
- (IL) INTERNAL LINING: Selected Internal Lining
- (IN) INSULATION: Selected Insulation
- (PEF) PEF ROD BACKING: Foam backing rod with sealant to cavity in Window perimeter that forms a waterproof air-seal. (Sealant 2:1 Ratio)
- (TF) TIMBER FRAME: H1.2 min treated timber framing
- (TP) TIMBER PACKER: Tan H3.2 Treated Packer
- (WB) WEATHER BOARD: Selected JSC Bevel Back Weatherboard
- (WL) WINDOW LINER: As Specified
- (WB) WEATHER BOARD: JSC Bevel Back Weatherboard
- (WH) WEATHERHEAD: (OPTIONAL) Selected JSC Horizontal batten above window as necessary to suit profile, shaped to shed water, sealant to back of head scriber
- (WS) WINDOW SCRIBER: Sealant to back of scriber and 75 x 3.15mm 316 Stainless Steel nail in 3mm predrilled hole.
- (WZ) WANZ SUPPORT: Provide window support as required by joinery manufacturer

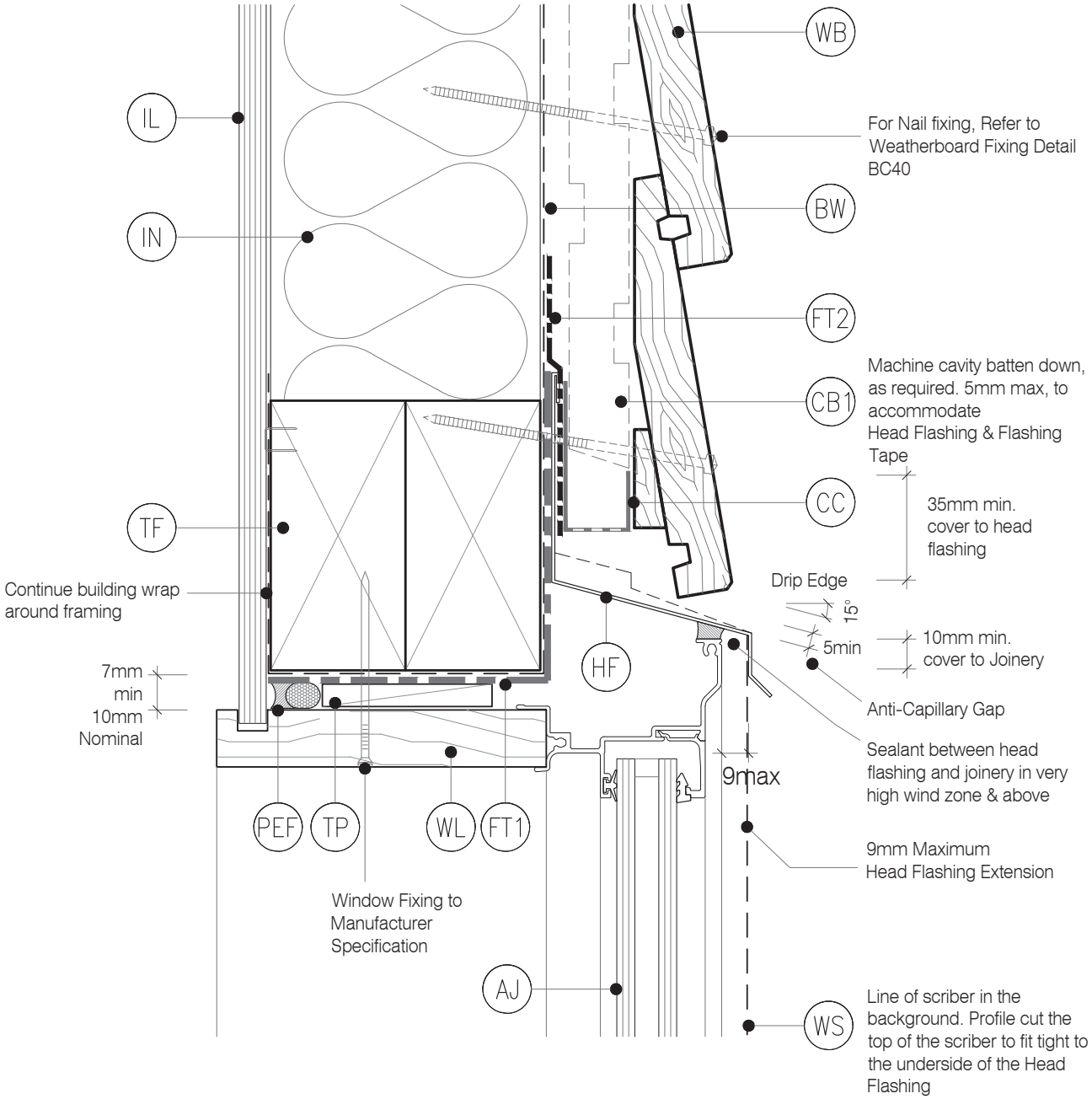

JSC PREMIUM ARCHITECTURAL & BUILDING SOLUTIONS

TYPE
BEVEL BACK WB- 20MM CAVITY FIX

NAME
Window Head Detail

- TO BE READ IN CONJUNCTION WITH COMPLETE JSC BEVELCLAD SYSTEM LITERATURE
- DETAILS MAY BE SUBJECT CHANGE WITHOUT NOTICE

CodeMark CMNZ30082

DRAWING SCALE	ISSUE DATE
1:2 @ A4	12/02/2024
DRAWING NUMBER	**VERSION**
JSC 20CF BC10	2.4

LEGEND:

- (AJ) ALUMINIUM JOINERY: Selected double glazed aluminium joinery. To E2/AS1 9.1.10
- (BW) BUILDING WRAP: Flexible Wall Underlay, As per NZBC E2/AS1 - Table 23, In extra high wind zones, Rigid Underlay required (9.1.7.2 E2/AS1)
- (CB1) CAVITY BATTEN - NON STRUCTURAL : Horizontally installed JSC-U 45mm x 20mm Radiata Pine H3.2 treated, both face castellated and 18° bevelled edges.
- (CB2) CAVITY BATTEN - NON STRUCTURAL : Vertically installed JSC-U 45mm x 20mm Radiata Pine H3.2 treated, both face castellated and 18° bevelled edges. Site machined to allow for flashing.
- (CC) CAVITY CLOSURE: Cavity closure strip, positioned to give a 15mm min. drip edge to cladding
- (FT1) FLASHING TAPE: Flashing tape over wrap 70mm (50 min) turn-down required in corners only. Refer to Fig. 72 of NZBC E2/AS1
- (FT2) FLEXIBLE FLASHING TAPE: Flexible flashing tape lapped over aluminium head flashing or 2nd layer of Building Wrap, taped joint to top of timber frame
- (HF) HEAD FLASHING: Aluminium head flashing with minimum 15 degree fall, optional hemmed edges as per table 7 E2/AS1
- (IL) INTERNAL LINING: Selected Internal Lining
- (IN) INSULATION: Selected Insulation
- (PEF) PEF ROD BACKING: Foam backing rod with sealant to cavity in Window perimeter that forms a waterproof air-seal. (Sealant 2:1 Ratio)
- (TF) TIMBER FRAME: H1.2 min treated timber framing
- (TP) TIMBER PACKER: Tan H3.2 Treated Packer
- (WB) WEATHER BOARD: Selected JSC Bevel Back Weatherboard
- (WL) WINDOW LINER: As Specified
- (WB) WEATHER BOARD: JSC Bevel Back Weatherboard
- (WH) WEATHERHEAD: (OPTIONAL) Selected JSC Horizontal batten above window as necessary to suit profile, shaped to shed water, sealant to back of head scriber
- (WS) WINDOW SCRIBER: Sealant to back of scriber and 75 x 3.15mm 316 Stainless Steel nail in 3mm predrilled hole.
- (WZ) WANZ SUPPORT: Provide window support as required by joinery manufacturer

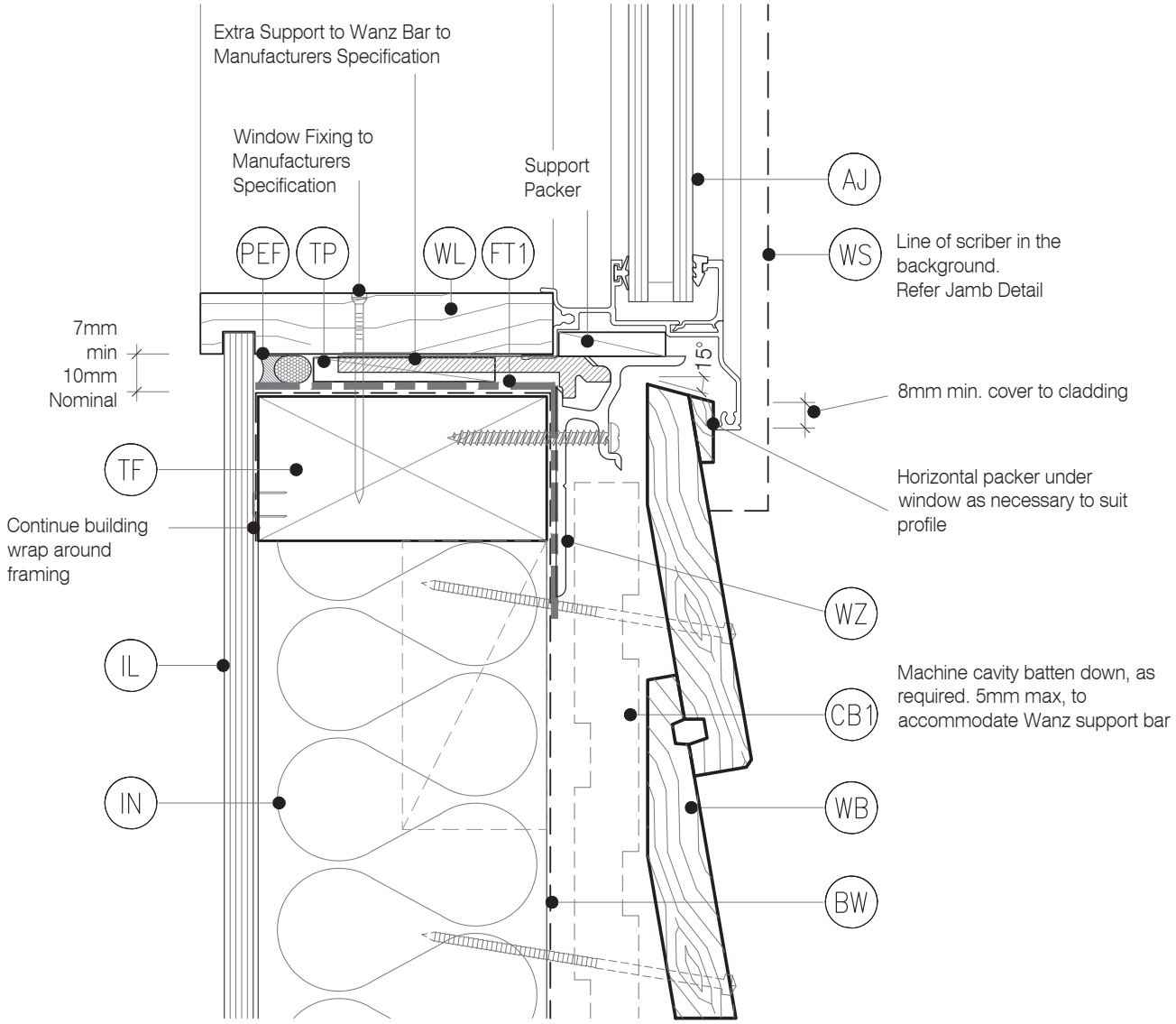

JSC PREMIUM ARCHITECTURAL & BUILDING SOLUTIONS

TYPE
BEVEL BACK WB - 20MM CAVITY FIX

NAME
Window Sill Detail

- TO BE READ IN CONJUNCTION WITH COMPLETE JSC BEVELCLAD SYSTEM LITERATURE
- DETAILS MAY BE SUBJECT CHANGE WITHOUT NOTICE

CodeMark CMNZ30082

DRAWING SCALE	ISSUE DATE
1:2 @ A4	12/02/2024
DRAWING NUMBER	**VERSION**
JSC 20CF BC11	2.4

LEGEND:

- (AJ) ALUMINIUM JOINERY: Selected double glazed aluminium joinery. To E2/AS1 9.1.10
- (BW) BUILDING WRAP: Flexible Wall Underlay, As per NZBC E2/AS1 - Table 23, In extra high wind zones, Rigid Underlay required (9.1.7.2 E2/AS1)
- (CB1) CAVITY BATTEN - NON STRUCTURAL : Horizontally installed JSC-U 45mm x 20mm Radiata Pine H3.2 treated, both face castellated and 18° bevelled edges.
- (CB2) CAVITY BATTEN - NON STRUCTURAL : Vertically installed JSC-U 45mm x 20mm Radiata Pine H3.2 treated, both face castellated and 18° bevelled edges. Site machined to allow for flashing.
- (CC) CAVITY CLOSURE: Cavity closure strip, positioned to give a 15mm min. drip edge to cladding
- (FT1) FLASHING TAPE: Flashing tape over wrap 70mm (50 min) turn-down required in corners only. Refer to Fig. 72 of NZBC E2/AS1
- (FT2) FLEXIBLE FLASHING TAPE: Flexible flashing tape lapped over aluminium head flashing or 2nd layer of Building Wrap, taped joint to top of timber frame
- (HF) HEAD FLASHING: Aluminium head flashing with minimum 15 degree fall, optional hemmed edges as per table 7 E2/AS1
- (IL) INTERNAL LINING: Selected Internal Lining
- (IN) INSULATION: Selected Insulation
- (PEF) PEF ROD BACKING: Foam backing rod with sealant to cavity in Window perimeter that forms a waterproof air-seal. (Sealant 2:1 Ratio)
- (TF) TIMBER FRAME: H1.2 min treated timber framing
- (TP) TIMBER PACKER: Tan H3.2 Treated Packer
- (WB) WEATHER BOARD: Selected JSC Bevel Back Weatherboard
- (WL) WINDOW LINER: As Specified
- (WB) WEATHER BOARD: JSC Bevel Back Weatherboard
- (WH) WEATHERHEAD: (OPTIONAL) Selected JSC Horizontal batten above window as necessary to suit profile, shaped to shed water, sealant to back of head scriber
- (WS) WINDOW SCRIBER: Sealant to back of scriber and 75 x 3.15mm 316 Stainless Steel nail in 3mm predrilled hole.
- (WZ) WANZ SUPPORT: Provide window support as required by joinery manufacturer

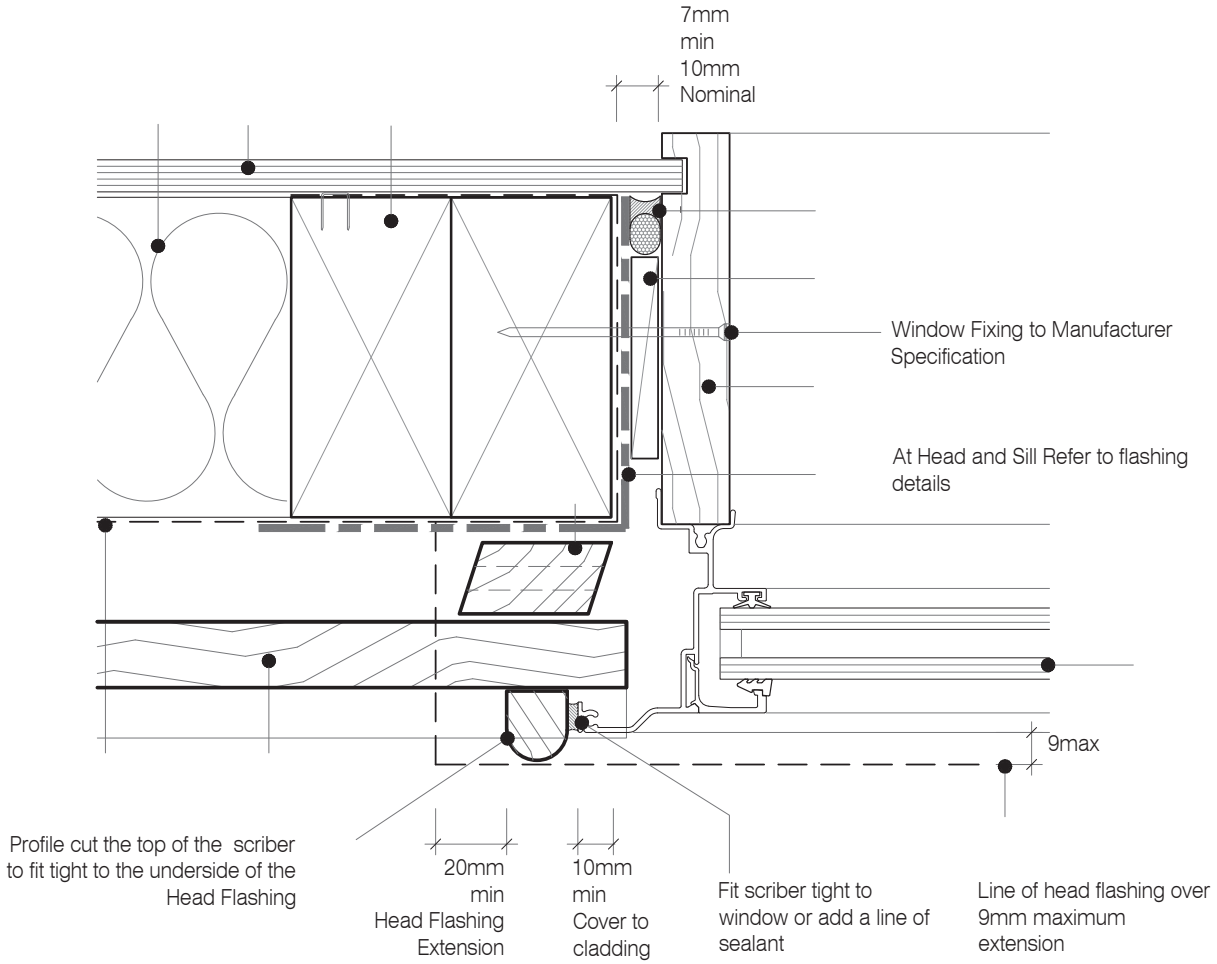

NOTE : No Scriber Option :
The Aluminium Joinery must sit hard against the back of the joinery flange and the timber weatherboards with a E.P.S Compressible bond breaker foam seal between

JSC PREMIUM ARCHITECTURAL & BUILDING SOLUTIONS

TYPE
BEVEL BACK WB - 20MM CAVITY FIX

NAME
Window Jamb Detail

- TO BE READ IN CONJUNCTION WITH COMPLETE JSC BEVELCLAD SYSTEM LITERATURE
- DETAILS MAY BE SUBJECT CHANGE WITHOUT NOTICE

CodeMark CMNZ30082

DRAWING SCALE	ISSUE DATE
1:2 @ A4	12/02/2024
DRAWING NUMBER	**VERSION**
JSC 20CF BC12	2.4

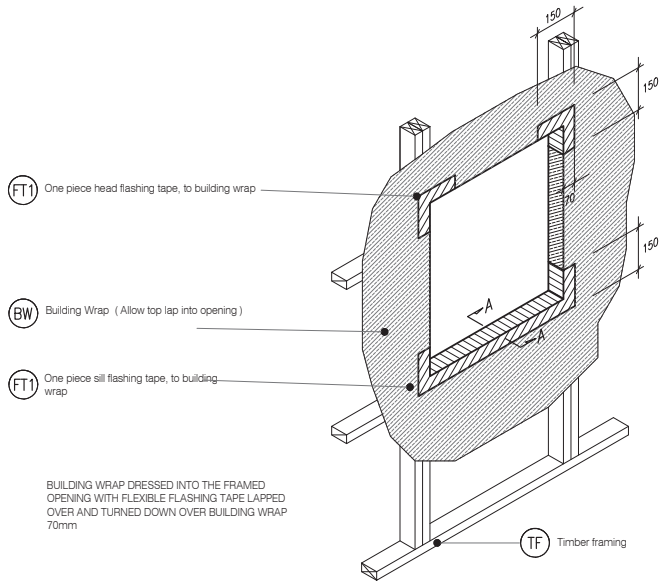

W4 / BC13 TYPICAL WINDOW OPENING (FLASHING TAPE)

SCALE : N.T.S

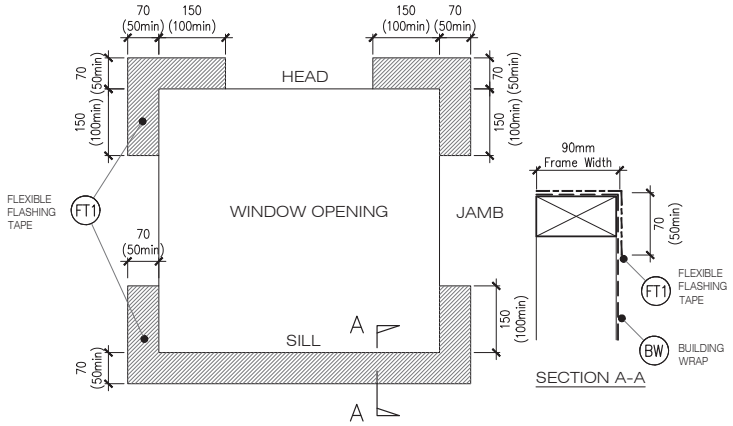

W5 / BC13 FLEXIBLE BUILDING WRAP AT OPENING

SCALE : 1 / 5 @ A1, 1 / 10 @ A3

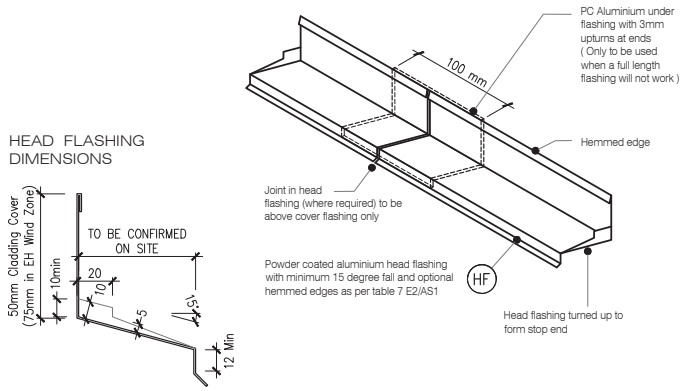

ONE PIECE PC ALUMINIUM HEAD FLASHING 15° SLOPE WITH 10mm min COVER TO JOINERY EXTEND 30mm min EITHER SIDE OF JOINERY WITH STOP ENDS

W6 / BC13 TYPICAL HEAD & FLASHING JOINT

SCALE : 1 / 2 @ A1, 1 / 4 @ A3

JSC PREMIUM ARCHITECTURAL & BUILDING SOLUTIONS

TYPE
BEVEL BACK WB - 20MM CAVITY FIX

NAME
Window Flashing Details

- TO BE READ IN CONJUNCTION WITH COMPLETE JSC BEVELCLAD SYSTEM LITERATURE
- DETAILS MAY BE SUBJECT CHANGE WITHOUT NOTICE

CodeMark CMNZ30082

DRAWING SCALE	ISSUE DATE
1:2 @ A4	12/02/2024
DRAWING NUMBER	**VERSION**
JSC 20CF BC13	2.4

LEGEND:

- (AJ) ALUMINIUM JOINERY: Selected double glazed aluminium joinery. To E2/AS1 9.1.10
- (BW) BUILDING WRAP: Flexible Wall Underlay, As per NZBC E2/AS1 - Table 23, In extra high wind zones, Rigid Underlay required (9.1.7.2 E2/AS1)
- (CB1) CAVITY BATTEN - NON STRUCTURAL : Vertically installed JSC-U 45mm x 20mm Radiata Pine H3.2 treated, both face castellated and 18° bevelled edges. Site machined to allow for flashing.
- (CC) CAVITY CLOSURE: Cavity closure strip, positioned to give a 15mm Min drip edge to cladding
- (DS) DOOR SCRIBER: Sealant to back of scriber and 75 x 3.15mm 316 Stainless Steel nail in 3mm predrilled hole.
- (FT1) FLASHING TAPE: Flashing tape over wrap 70mm (50 min) turn-down required in corners only. Refer to Fig. 72 of NZBC E2/AS1
- (FT2) FLEXIBLE FLASHING TAPE: Flexible flashing tape lapped over aluminium head flashing or 2nd layer of Building Wrap, taped joint to top of timber frame
- (HF) HEAD FLASHING: Aluminium head flashing with minimum 15 degree fall, optional hemmed edges as per table 7 E2/AS1
- (IL) INTERNAL LINING: Selected Internal Lining
- (IN) INSULATION: Selected Insulation
- (PEF) PEF ROD BACKING: Foam backing rod with sealant to cavity in Window perimeter that forms a waterproof air-seal. (Sealant 2:1 Ratio)
- (TF) TIMBER FRAME: H1.2 min treated timber framing
- (TP) TIMBER PACKER: Tan H3.2 Treated Packer
- (WB) WEATHER BOARD: Selected JSC Bevel Back Weatherboard
- (DL) DOOR LINER: As Specified
- (WB) WEATHER BOARD: JSC Bevel Back Weatherboard
- (WH) WEATHERHEAD: (OPTIONAL) Selected JSC Horizontal batten above meter box as necessary to suit profile, shaped to shed water, sealant to back of head scriber
- (WZ) WANZ SUPPORT: Provide window support as required by joinery manufacturer

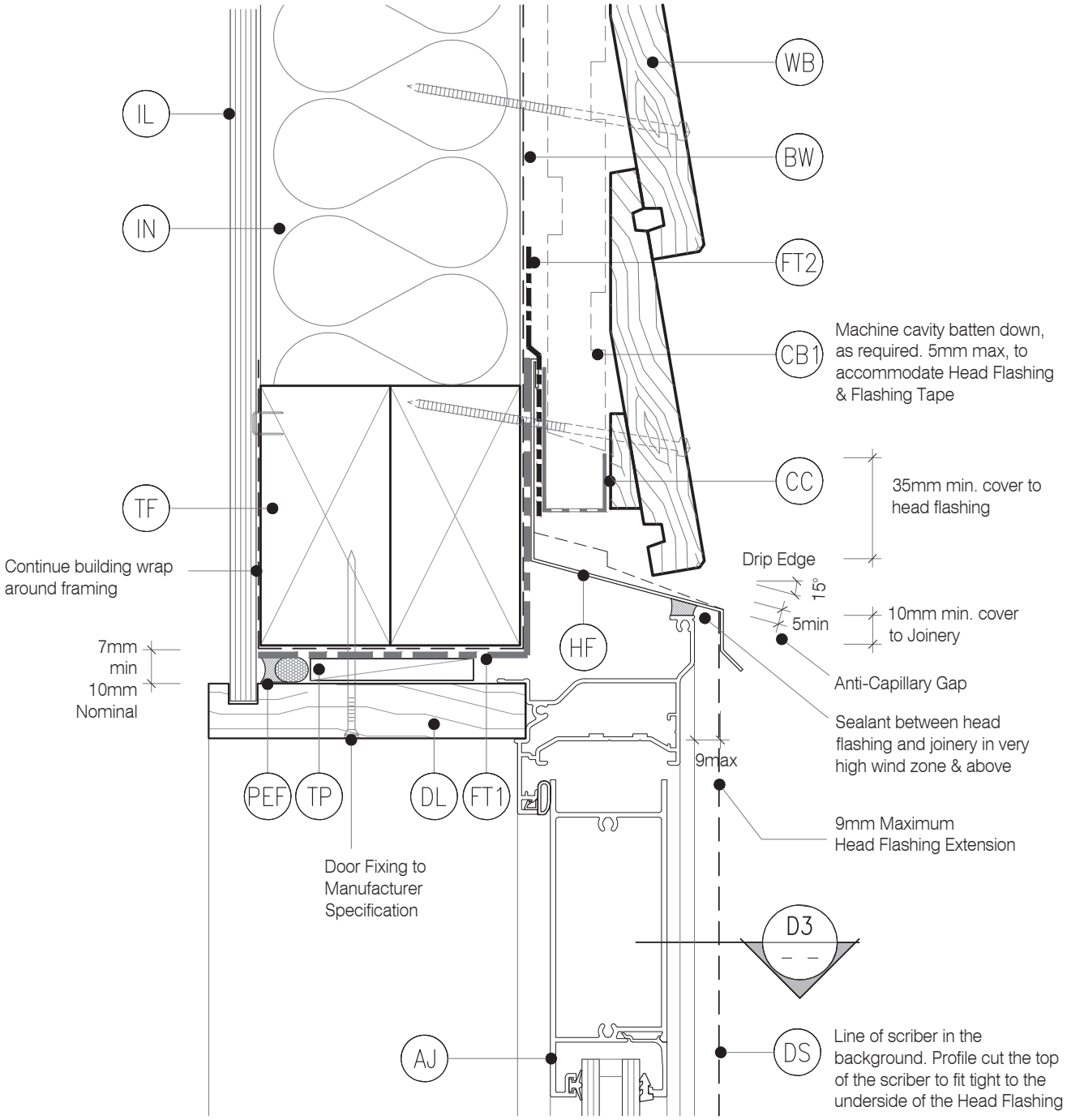

JSC PREMIUM ARCHITECTURAL & BUILDING SOLUTIONS

TYPE
BEVEL BACK WB - 20MM CAVITY FIX

NAME
Door Head Detail

- TO BE READ IN CONJUNCTION WITH COMPLETE JSC BEVELCLAD SYSTEM LITERATURE
- DETAILS MAY BE SUBJECT CHANGE WITHOUT NOTICE

CodeMark CMNZ30082

DRAWING SCALE	ISSUE DATE
1:2 @ A4	12/02/2024
DRAWING NUMBER	VERSION
JSC 20CF BC20	2.4

LEGEND:

- (AJ) ALUMINIUM JOINERY: Selected double glazed aluminium joinery. To E2/AS1 9.1.10
- (BW) BUILDING WRAP: Flexible Wall Underlay, As per NZBC E2/AS1 - Table 23, In extra high wind zones, Rigid Underlay required (9.1.7.2 E2/AS1)
- (CB1) CAVITY BATTEN - NON STRUCTURAL : Vertically installed JSC-U 45mm x 20mm Radiata Pine H3.2 treated, both face castellated and 18° bevelled edges. Site machined to allow for flashing.
- (CC) CAVITY CLOSURE: Cavity closure strip, positioned to give a 15mm Min drip edge to cladding
- (DS) DOOR SCRIBER: Sealant to back of scriber and 75 x 3.15mm 316 Stainless Steel nail in 3mm predrilled hole.
- (FT1) FLASHING TAPE: Flashing tape over wrap 70mm (50 min) turn-down required in corners only. Refer to Fig. 72 of NZBC E2/AS1
- (FT2) FLEXIBLE FLASHING TAPE: Flexible flashing tape lapped over aluminium head flashing or 2nd layer of Building Wrap, taped joint to top of timber frame
- (HF) HEAD FLASHING: Aluminium head flashing with minimum 15 degree fall, optional hemmed edges as per table 7 E2/AS1
- (IL) INTERNAL LINING: Selected Internal Lining
- (IN) INSULATION: Selected Insulation
- (PEF) PEF ROD BACKING: Foam backing rod with sealant to cavity in Window perimeter that forms a waterproof air-seal. (Sealant 2:1 Ratio)
- (TF) TIMBER FRAME: H1.2 min treated timber framing
- (TP) TIMBER PACKER: Tan H3.2 Treated Packer
- (WB) WEATHER BOARD: Selected JSC Bevel Back Weatherboard
- (DL) DOOR LINER: As Specified
- (WB) WEATHER BOARD: JSC Bevel Back Weatherboard
- (WH) WEATHERHEAD: (OPTIONAL) Selected JSC Horizontal batten above meter box as necessary to suit profile, shaped to shed water, sealant to back of head scriber
- (WZ) WANZ SUPPORT: Provide window support as required by joinery manufacturer

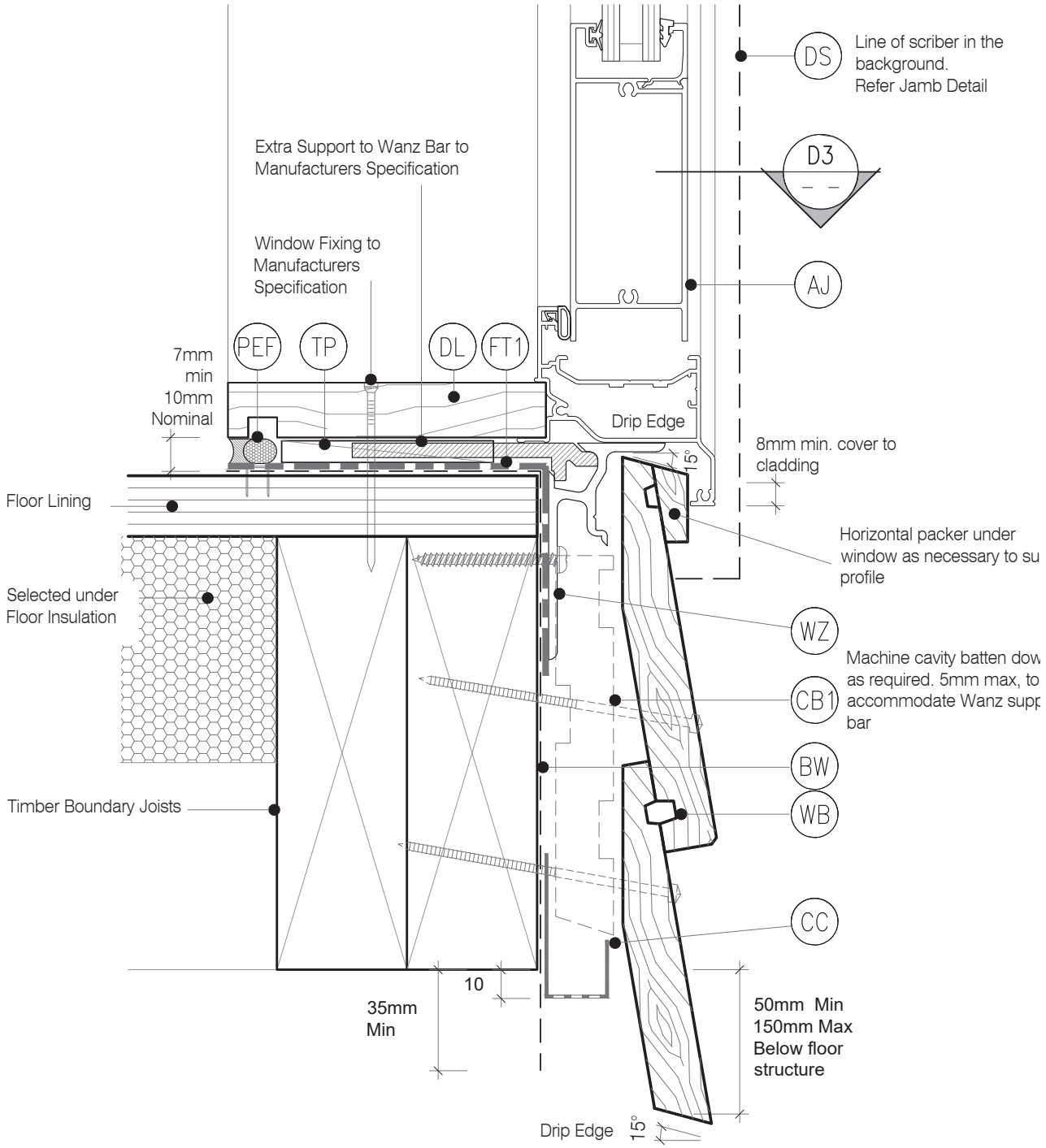

JSC PREMIUM ARCHITECTURAL & BUILDING SOLUTIONS

TYPE
BEVEL BACK WB - 20MM CAVITY FIX

NAME
Door Sill Detail

- TO BE READ IN CONJUNCTION WITH COMPLETE JSC BEVELCLAD SYSTEM LITERATURE
- DETAILS MAY BE SUBJECT CHANGE WITHOUT NOTICE

CodeMark CMNZ30082

DRAWING SCALE	ISSUE DATE
1:2 @ A4	12/02/2024
DRAWING NUMBER	VERSION
JSC 20CF BC21	2.4

LEGEND:

- (AJ) ALUMINIUM JOINERY: Selected double glazed aluminium joinery. To E2/AS1 9.1.10
- (BW) BUILDING WRAP: Flexible Wall Underlay, As per NZBC E2/AS1 - Table 23, In extra high wind zones, Rigid Underlay required (9.1.7.2 E2/AS1)
- (CB1) CAVITY BATTEN - NON STRUCTURAL : Vertically installed JSC-U 45mm x 20mm Radiata Pine H3.2 treated, both face castellated and 18° bevelled edges. Site machined to allow for flashing.
- (CC) CAVITY CLOSURE: Cavity closure strip, positioned to give a 15mm Min drip edge to cladding
- (DS) DOOR SCRIBER: Sealant to back of scriber and 75 x 3.15mm 316 Stainless Steel nail in 3mm predrilled hole.
- (FT1) FLASHING TAPE: Flashing tape over wrap 70mm (50 min) turn-down required in corners only. Refer to Fig. 72 of NZBC E2/AS1
- (FT2) FLEXIBLE FLASHING TAPE: Flexible flashing tape lapped over aluminium head flashing or 2nd layer of Building Wrap, taped joint to top of timber frame
- (HF) HEAD FLASHING: Aluminium head flashing with minimum 15 degree fall, optional hemmed edges as per table 7 E2/AS1
- (IL) INTERNAL LINING: Selected Internal Lining
- (IN) INSULATION: Selected Insulation
- (PEF) PEF ROD BACKING: Foam backing rod with sealant to cavity in Window perimeter that forms a waterproof air-seal. (Sealant 2:1 Ratio)
- (TF) TIMBER FRAME: H1.2 min treated timber framing
- (TP) TIMBER PACKER: Tan H3.2 Treated Packer
- (WB) WEATHER BOARD: Selected JSC Bevel Back Weatherboard
- (DL) DOOR LINER: As Specified
- (WB) WEATHER BOARD: JSC Bevel Back Weatherboard
- (WH) WEATHERHEAD: (OPTIONAL) Selected JSC Horizontal batten above meter box as necessary to suit profile, shaped to shed water, sealant to back of head scriber
- (WZ) WANZ SUPPORT: Provide window support as required by joinery manufacturer

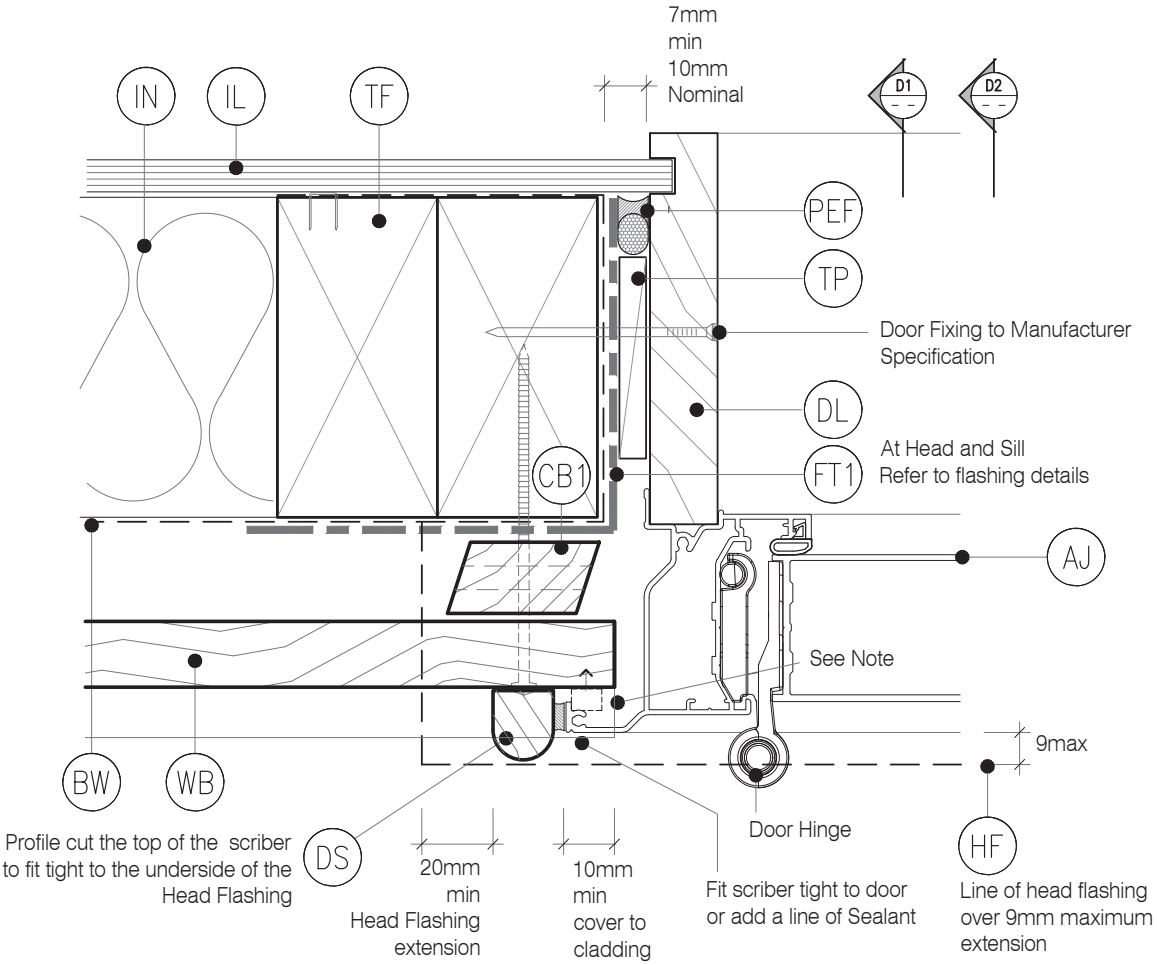

NOTE : No Scriber Option :
The Aluminium Joinery must sit hard against the back of the joinery flange and the timber weatherboards with a E.P.S Compressible bond breaker foam seal between

JSC PREMIUM ARCHITECTURAL & BUILDING SOLUTIONS

TYPE
BEVEL BACK WB - 20MM CAVITY FIX

NAME
Door Jamb Detail

- TO BE READ IN CONJUNCTION WITH COMPLETE JSC BEVELCLAD SYSTEM LITERATURE
- DETAILS MAY BE SUBJECT CHANGE WITHOUT NOTICE

CodeMark CMNZ30082

DRAWING SCALE	ISSUE DATE
1:2 @ A4	12/02/2024
DRAWING NUMBER	**VERSION**
JSC 20CF BC22	2.4

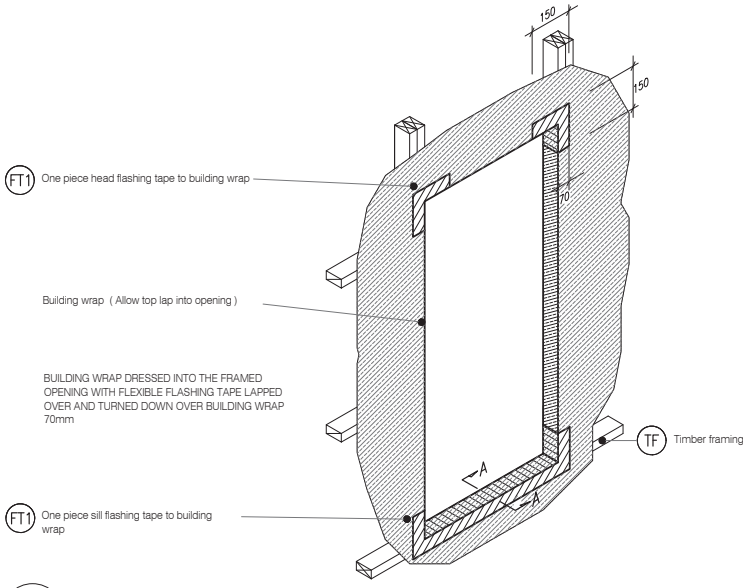

D4 BC23 TYPICAL DOOR OPENING (FLASHING TAPE)

SCALE : N.T.S

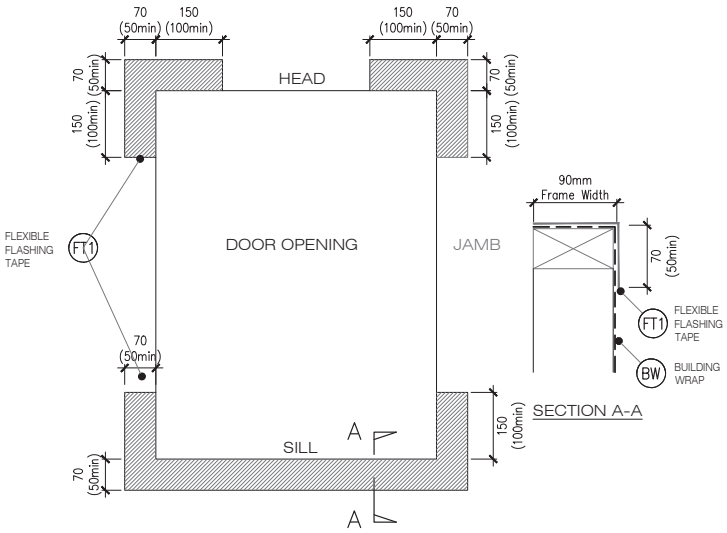

D5 BC23 FLEXIBLE BUILDING WRAP AT OPENING

SCALE : 1 / 5 @ A1, 1 / 10 @ A3

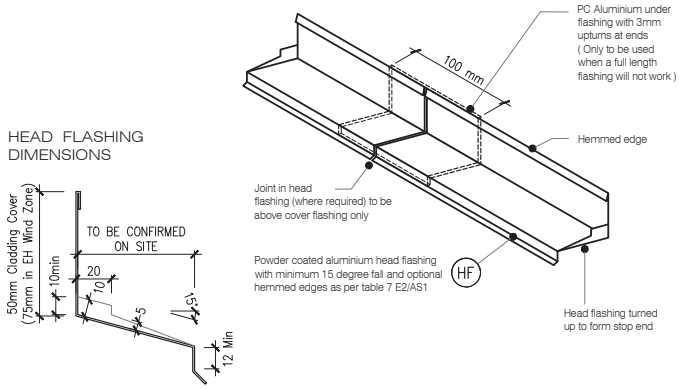

ONE PIECE PC ALUMINIUM HEAD FLASHING 15° SLOPE WITH 10mm minimum COVER TO JOINERY EXTEND 30mm min EITHER SIDE OF JOINERY WITH STOP ENDS

D6 BC23 TYPICAL HEAD & FLASHING JOINT

SCALE : 1 / 2 @ A1, 1 / 4 @ A3

JSC PREMIUM ARCHITECTURAL & BUILDING SOLUTIONS

TYPE

BEVEL BACK WB- 20MM CAVITY FIX

NAME

Door Flashing Details

- TO BE READ IN CONJUNCTION WITH COMPLETE JSC BEVELCLAD SYSTEM LITERATURE
- DETAILS MAY BE SUBJECT CHANGE WITHOUT NOTICE

CodeMark CMNZ30082

DRAWING SCALE	ISSUE DATE
1:2 @ A4	12/02/2024
DRAWING NUMBER	**VERSION**
JSC 20CF BC23	2.4

LEGEND:

- (BW) BUILDING WRAP: Flexible Wall Underlay, As per NZBC E2/AS1 - Table 23, In extra high wind zones, Rigid Underlay required (9.1.7.2 E2/AS1)
- (CB1) CAVITY BATTEN - NON STRUCTURAL : Horizontally installed JSC-U 45mm x 20mm Radiata Pine H3.2 treated, both face castellated and 18° bevelled edges.
- (CC) CAVITY CLOSURE: Cavity closure strip, positioned to give a 15mm minimum drip edge to cladding
- (FT1) FLASHING TAPE: Flashing tape over wrap 70mm (50 min) turn-down required in corners only. Refer to Fig. 72 of NZBC E2/AS1
- (FT2) FLEXIBLE FLASHING TAPE: Flexible flashing tape lapped over aluminium head flashing or 2nd layer of Building Wrap, taped joint to top of timber frame
- (HF) HEAD FLASHING: Aluminium head flashing with minimum 15 degree fall, optional hemmed edges as per table 7 E2/AS1
- (IL) INTERNAL LINING: Selected Internal Lining
- (IN) INSULATION: Selected Insulation
- (PEF) PEF ROD BACKING: Foam backing rod with sealant to cavity in Window perimeter that forms a waterproof air-seal. (Sealant 2:1 Ratio)
- (MB) METER BOX: Electrical meter box, with removable hinged door and polycarbonate viewing window
- (MS) METER BOX SCRIBER: Sealant to back of scriber and 75 x 3.15mm 316 Stainless Steel nail in 3mm predrilled hole.
- (TF) TIMBER FRAME: H1.2 min treated timber framing
- (TP) TIMBER PACKER: Tan H3.2 Treated Packer
- (WB) WEATHER BOARD: Selected JSC Bevel Back Weatherboard
- (WL) WINDOW LINER: As Specified
- (WH) WEATHERHEAD: (OPTIONAL) Selected JSC Horizontal batten above meter box as necessary to suit profile, shaped to shed water, sealant to back of head scriber

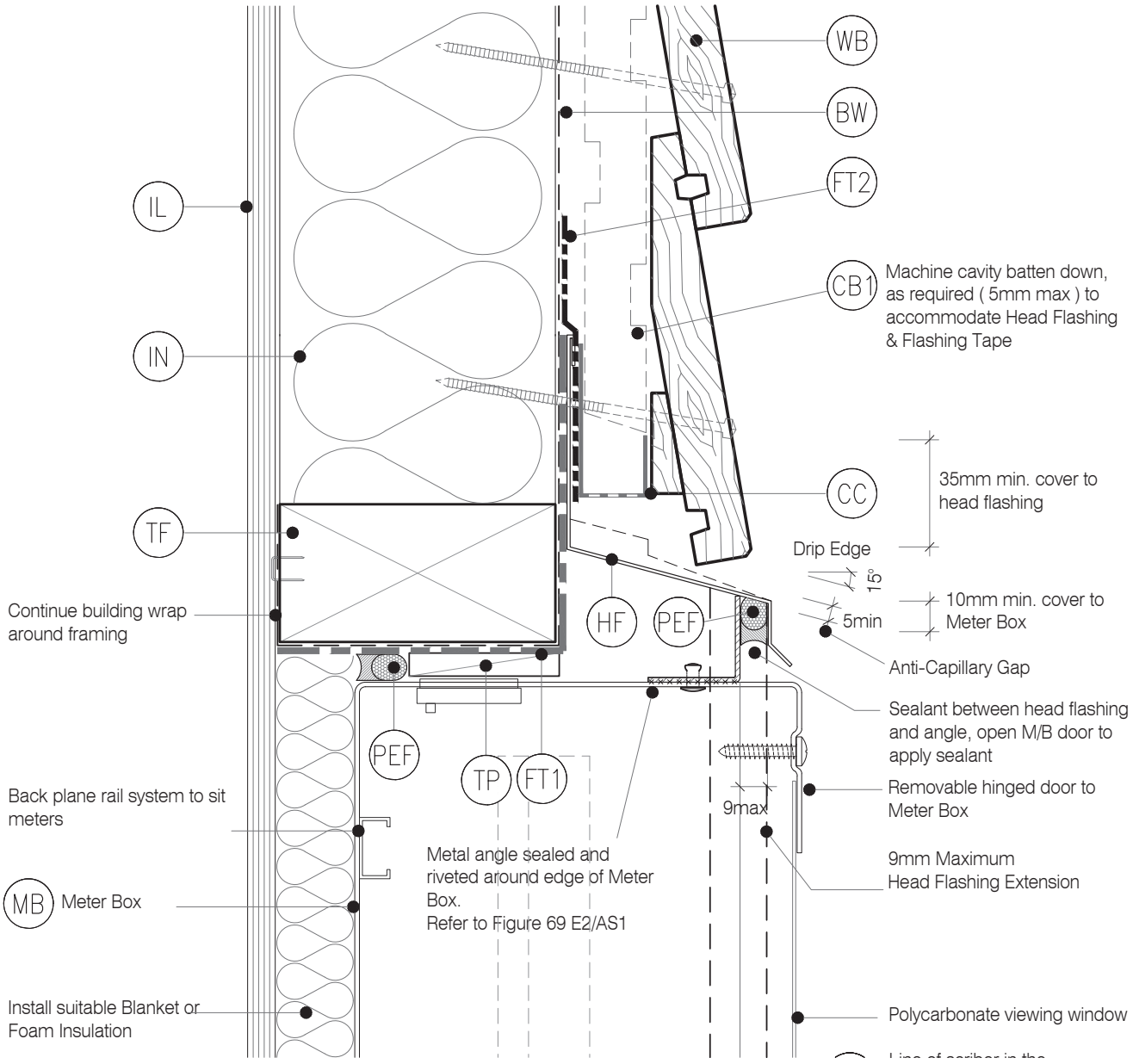

JSC PREMIUM ARCHITECTURAL & BUILDING SOLUTIONS

TYPE
BEVEL BACK WB - 20MM CAVITY FIX

NAME
Meter Box Head Detail

- TO BE READ IN CONJUNCTION WITH COMPLETE JSC BEVELCLAD SYSTEM LITERATURE
- DETAILS MAY BE SUBJECT CHANGE WITHOUT NOTICE

CodeMark CMNZ30082

DRAWING SCALE	ISSUE DATE
1:2 @ A4	12/02/2024
DRAWING NUMBER	**VERSION**
JSC 20CF BC30	2.4

LEGEND:

- (BW) BUILDING WRAP: Flexible Wall Underlay, As per NZBC E2/AS1 - Table 23, In extra high wind zones, Rigid Underlay required (9.1.7.2 E2/AS1)
- (CB1) CAVITY BATTEN - NON STRUCTURAL : Horizontally installed JSC-U 45mm x 20mm Radiata Pine H3.2 treated, both face castellated and 18° bevelled edges.
- (CC) CAVITY CLOSURE: Cavity closure strip, positioned to give a 15mm minimum drip edge to cladding
- (FT1) FLASHING TAPE: Flashing tape over wrap 70mm (50 min) turn-down required in corners only. Refer to Fig. 72 of NZBC E2/AS1
- (FT2) FLEXIBLE FLASHING TAPE: Flexible flashing tape lapped over aluminium head flashing or 2nd layer of Building Wrap, taped joint to top of timber frame
- (HF) HEAD FLASHING: Aluminium head flashing with minimum 15 degree fall, optional hemmed edges as per table 7 E2/AS1
- (IL) INTERNAL LINING: Selected Internal Lining
- (IN) INSULATION: Selected Insulation
- (PEF) PEF ROD BACKING: Foam backing rod with sealant to cavity in Window perimeter that forms a waterproof air-seal. (Sealant 2:1 Ratio)
- (MB) METER BOX: Electrical meter box, with removable hinged door and polycarbonate viewing window
- (MS) METER BOX SCRIBER: Sealant to back of scriber and 75 x 3.15mm 316 Stainless Steel nail in 3mm predrilled hole.
- (TF) TIMBER FRAME: H1.2 min treated timber framing
- (TP) TIMBER PACKER: Tan H3.2 Treated Packer
- (WB) WEATHER BOARD: Selected JSC Bevel Back Weatherboard
- (WL) WINDOW LINER: As Specified
- (WH) WEATHERHEAD: (OPTIONAL) Selected JSC Horizontal batten above meter box as necessary to suit profile, shaped to shed water, sealant to back of head scriber

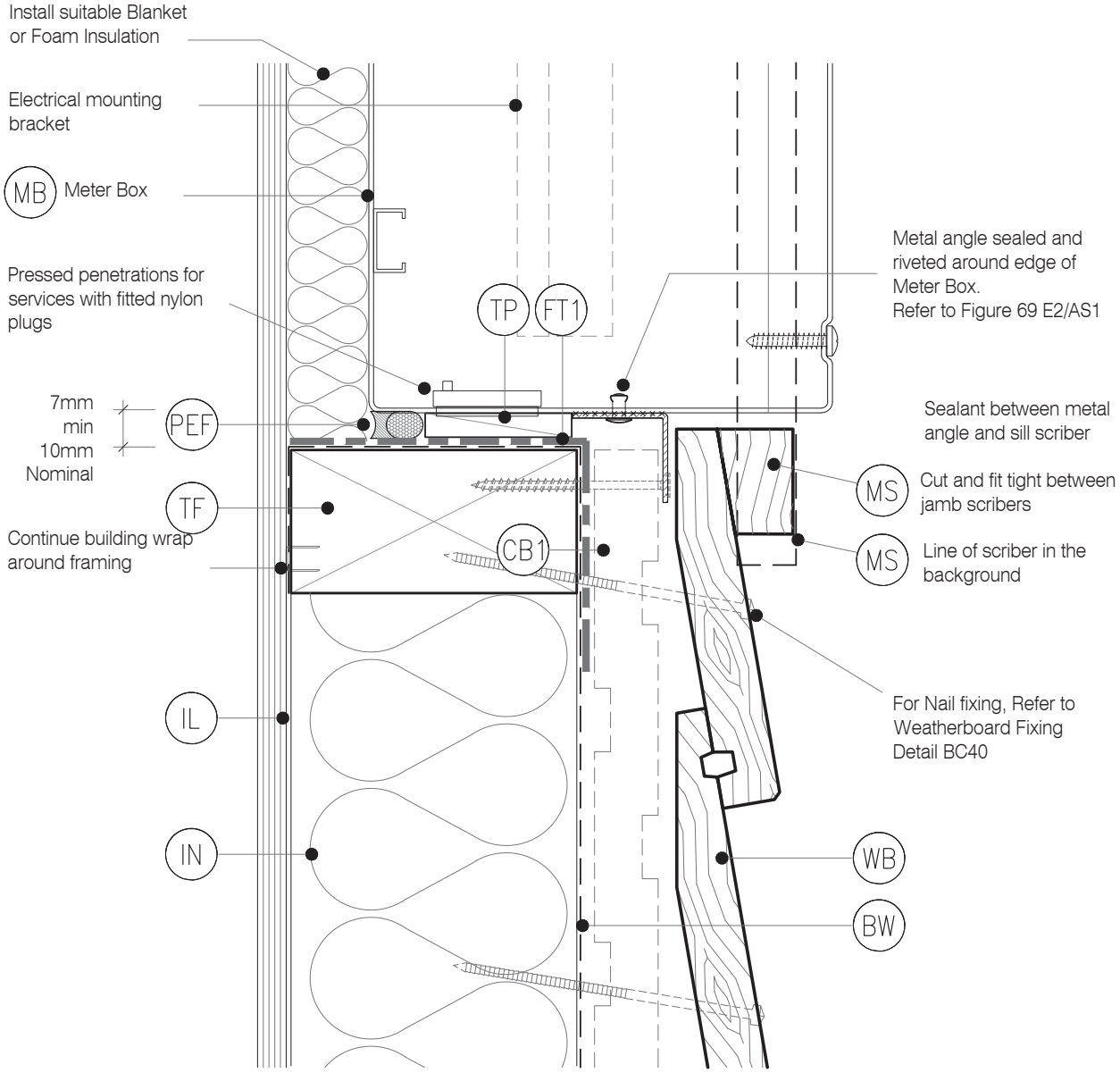

JSC PREMIUM ARCHITECTURAL & BUILDING SOLUTIONS

TYPE
BEVEL BACK WB- 20MM CAVITY FIX

NAME
Meter Box Sill Detail

- TO BE READ IN CONJUNCTION WITH COMPLETE JSC BEVELCLAD SYSTEM LITERATURE
- DETAILS MAY BE SUBJECT CHANGE WITHOUT NOTICE

CodeMark CMNZ30082

DRAWING SCALE	ISSUE DATE
1:2 @ A4	12/02/2024
DRAWING NUMBER	**VERSION**
JSC 20CF BC31	2.4

LEGEND:

- (BW) BUILDING WRAP: Flexible Wall Underlay, As per NZBC E2/AS1 - Table 23, In extra high wind zones, Rigid Underlay required (9.1.7.2 E2/AS1)
- (CB1) CAVITY BATTEN - NON STRUCTURAL : Horizontally installed JSC-U 45mm x 20mm Radiata Pine H3.2 treated, both face castellated and 18° bevelled edges.
- (CC) CAVITY CLOSURE: Cavity closure strip, positioned to give a 15mm minimum drip edge to cladding
- (FT1) FLASHING TAPE: Flashing tape over wrap 70mm (50 min) turn-down required in corners only. Refer to Fig. 72 of NZBC E2/AS1
- (FT2) FLEXIBLE FLASHING TAPE: Flexible flashing tape lapped over aluminium head flashing or 2nd layer of Building Wrap, taped joint to top of timber frame
- (HF) HEAD FLASHING: Aluminium head flashing with minimum 15 degree fall, optional hemmed edges as per table 7 E2/AS1
- (IL) INTERNAL LINING: Selected Internal Lining
- (IN) INSULATION: Selected Insulation
- (PEF) PEF ROD BACKING: Foam backing rod with sealant to cavity in Window perimeter that forms a waterproof air-seal. (Sealant 2:1 Ratio)
- (MB) METER BOX: Electrical meter box, with removable hinged door and polycarbonate viewing window
- (MS) METER BOX SCRIBER: Sealant to back of scriber and 75 x 3.15mm 316 Stainless Steel nail in 3mm predrilled hole.
- (TF) TIMBER FRAME: H1.2 min treated timber framing
- (TP) TIMBER PACKER: Tan H3.2 Treated Packer
- (WB) WEATHER BOARD: Selected JSC Bevel Back Weatherboard
- (WL) WINDOW LINER: As Specified
- (WH) WEATHERHEAD: (OPTIONAL) Selected JSC Horizontal batten above meter box as necessary to suit profile, shaped to shed water, sealant to back of head scriber

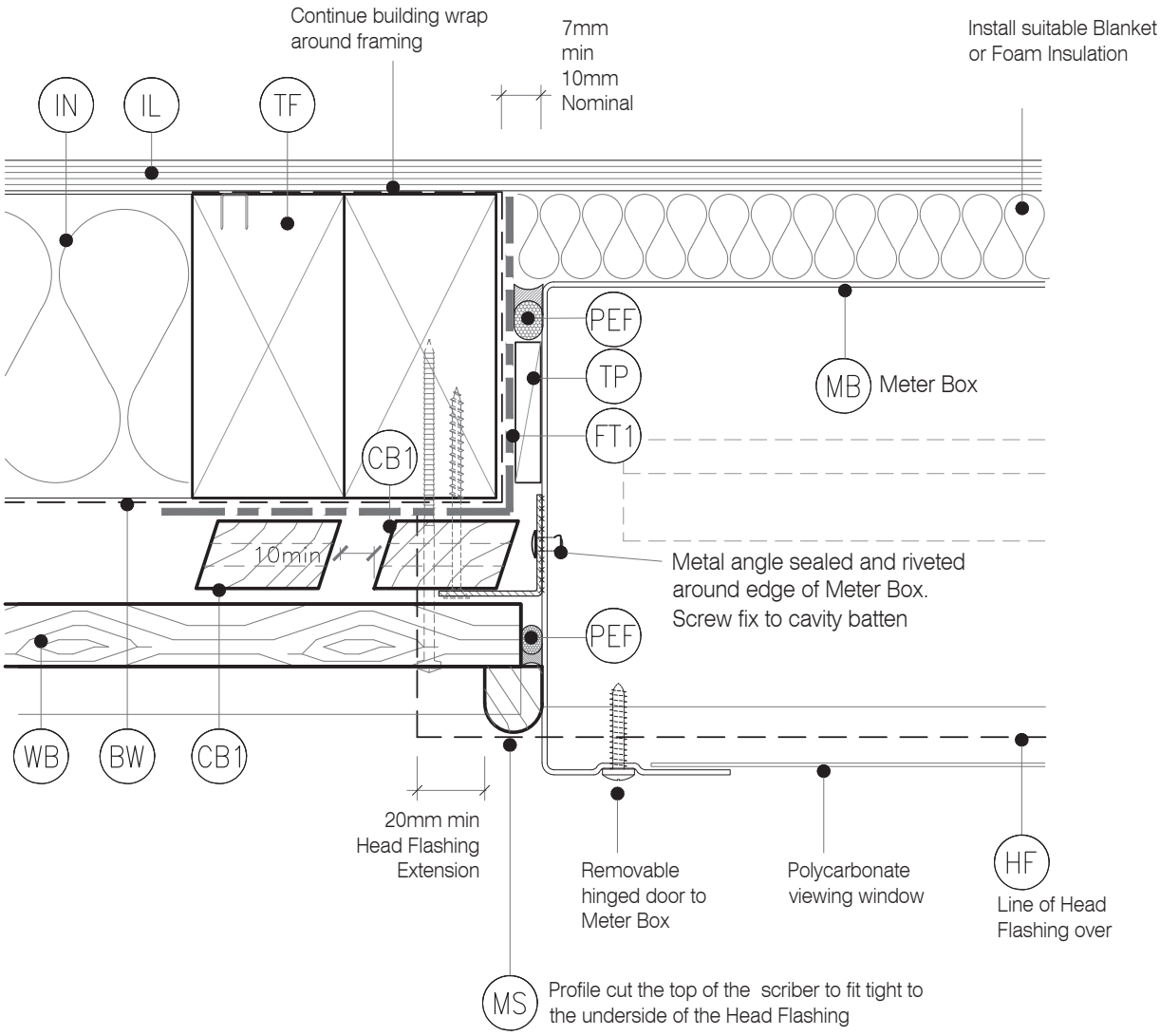

JSC PREMIUM ARCHITECTURAL & BUILDING SOLUTIONS

TYPE
BEVEL BACK WB - 20MM CAVITY FIX

NAME
Meter Box Jamb Detail

- TO BE READ IN CONJUNCTION WITH COMPLETE JSC BEVELCLAD SYSTEM LITERATURE
- DETAILS MAY BE SUBJECT CHANGE WITHOUT NOTICE

CodeMark CMNZ30082

DRAWING SCALE	ISSUE DATE
1:2 @ A4	12/02/2024
DRAWING NUMBER	VERSION
JSC 20CF BC32	2.4

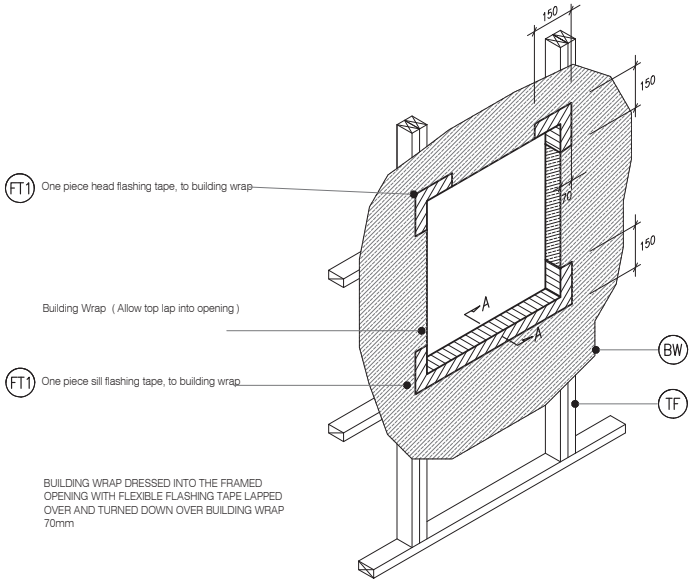

M4 BC33 TYPICAL METER BOX OPENING (FLASHING TAPE

SCALE : N.T.S

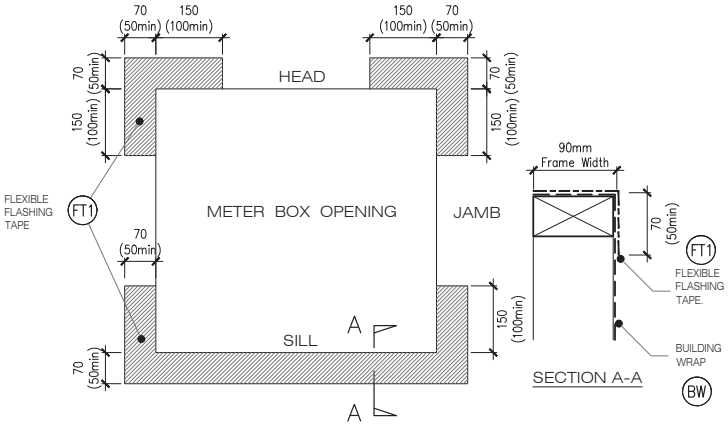

M5 BC33 FLEXIBLE BUILDING WRAP AT OPENING

SCALE : 1 / 5 @ A1, 1 / 10 @ A3

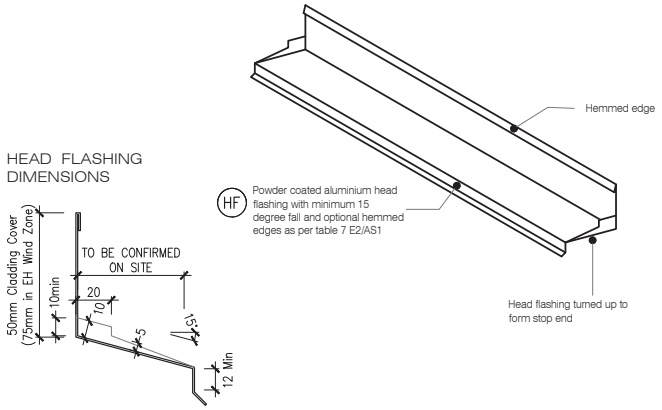

ONE PIECE PC ALUMINIUM HEAD FLASHING 15° SLOPE WITH 10mm min COVER
TO JOINERY EXTEND 30mm min EITHER SIDE OF JOINERY WITH STOP ENDS

M6 BC33 TYPICAL HEAD & FLASHING JOINT

SCALE : 1 / 2 @ A1, 1 / 4 @ A3

JSC PREMIUM ARCHITECTURAL & BUILDING SOLUTIONS

TYPE
BEVEL BACK WB- 20MM CAVITY FIX

NAME
Meter Box Flashing Details

- TO BE READ IN CONJUNCTION WITH COMPLETE JSC BEVELCLAD SYSTEM LITERATURE
- DETAILS MAY BE SUBJECT CHANGE WITHOUT NOTICE

CodeMark CMNZ30082

DRAWING SCALE	ISSUE DATE
1:2 @ A4	12/02/2024
DRAWING NUMBER	**VERSION**
JSC 20CF BC33	2.4

LEGEND:

- (BF) BACK FLASHING: Minimum 100mm Polypropylene or PVC rear flashing to provide 50mm cover past the scarf joint on each side
- (BW) BUILDING WRAP: Flexible Wall Underlay, as per NZBC E2/AS1 - Table 23. In extra high wind zones, Rigid Underlay required (9.1.7.2 E2/AS1)
- (CB1) CAVITY BATTEN - NON STRUCTURAL : Vertically installed JSC-U 45mm x 20mm Radiata Pine H3.2 treated, both face castellated and 18° bevelled edges.
- (CC) CAVITY CLOSURE: Cavity closure strip, positioned to give a 15mm minimum drip edge to cladding
- (FT4) FLEXIBLE FLASHING TAPE: Flexible flashing tape lapped into corner, Refer NZBC E2/AS1 4.3.11 Flashing tape is recommended due to movement that may occur in corners. Not required by E2/AS1
- (IL) INTERNAL LINING: Selected Internal Lining
- (IN) INSULATION: Selected Insulation
- (TF) TIMBER FRAME: H1.2 min treated timber framing
- (WB) WEATHERBOARD: Selected JSC Bevel Back Weatherboard

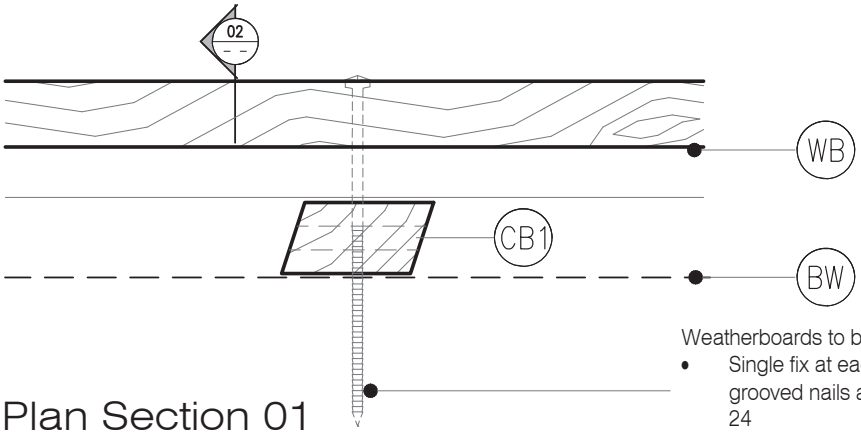

Plan Section 01

Weatherboards to be

- Single fix at each stud with annular grooved nails as per NZBC E2/AS1 Table 24
- Pre-drilled 1mm diameter smaller than the nail gauge
- Nailed with slight (2°+) upward slope
- Fixed with fixings to achieve a minimum of 30mm penetration into the framing
- Nailed 10mm above the top of the lower board
- Minimum 50mm from the ends of boards

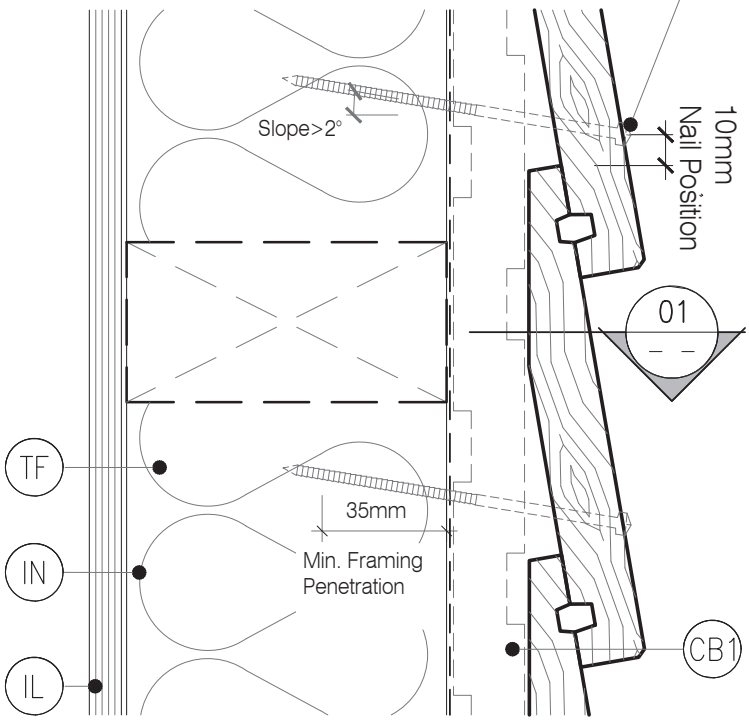

Cavity battens will be fixed by the cladding fixings, which will penetrate the wall framing. Battens only need temporary fixing until the cladding is fixed (E2/AS1 - Table 24)

Cross Section 02

JSC PREMIUM ARCHITECTURAL & BUILDING SOLUTIONS

TYPE
BEVEL BACK WB- 20MM CAVITY FIX

NAME
Weatherboard Fixing Detail

- TO BE READ IN CONJUNCTION WITH COMPLETE JSC BEVELCLAD SYSTEM LITERATURE
- DETAILS MAY BE SUBJECT CHANGE WITHOUT NOTICE

CodeMark CMNZ30082

DRAWING SCALE	ISSUE DATE
1:2 @ A4	12/02/2024
DRAWING NUMBER	**VERSION**
JSC 20CF BC40	2.4

LEGEND:

- (BF) BACK FLASHING: Minimum 100mm Polypropylene or PVC rear flashing to provide 50mm cover past the scarf joint on each side
- (BW) BUILDING WRAP: Flexible Wall Underlay, as per NZBC E2/AS1 - Table 23. In extra high wind zones, Rigid Underlay required (9.1.7.2 E2/AS1)
- (CB1) CAVITY BATTEN - NON STRUCTURAL : Vertically installed JSC-U 45mm x 20mm Radiata Pine H3.2 treated, both face castellated and 18° bevelled edges.
- (CC) CAVITY CLOSURE: Cavity closure strip, positioned to give a 15mm minimum drip edge to cladding
- (FT4) FLEXIBLE FLASHING TAPE: Flexible flashing tape lapped into corner, Refer NZBC E2/AS1 4.3.11 Flashing tape is recommended due to movement that may occur in corners. Not required by E2/AS1
- (IL) INTERNAL LINING: Selected Internal Lining
- (IN) INSULATION: Selected Insulation
- (TF) TIMBER FRAME: H1.2 min treated timber framing
- (WB) WEATHERBOARD: Selected JSC Bevel Back Weatherboard

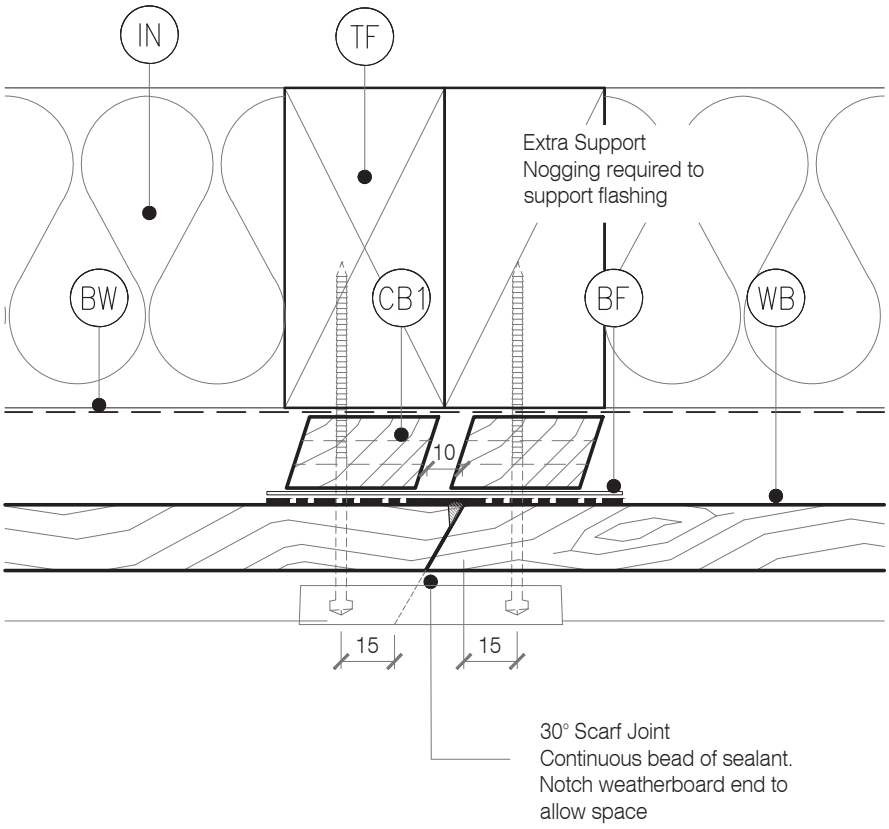

JSC PREMIUM ARCHITECTURAL & BUILDING SOLUTIONS

TYPE
BEVEL BACK WB - 20MM CAVITY FIX

NAME
Weatherboard Scarf Joint

- TO BE READ IN CONJUNCTION WITH COMPLETE JSC BEVELCLAD SYSTEM LITERATURE
- DETAILS MAY BE SUBJECT CHANGE WITHOUT NOTICE

CodeMark CMNZ30082

DRAWING SCALE	ISSUE DATE
1:2 @ A4	12/02/2024
DRAWING NUMBER	VERSION
JSC 20CF BC41	2.4

LEGEND:

- (BF) BACK FLASHING: Minimum 100mm Polypropylene or PVC rear flashing to provide 50mm cover past the scarf joint on each side
- (BW) BUILDING WRAP: Flexible Wall Underlay, as per NZBC E2/AS1 - Table 23. In extra high wind zones, Rigid Underlay required (9.1.7.2 E2/AS1)
- (CB1) CAVITY BATTEN - NON STRUCTURAL : Vertically installed JSC-U 45mm x 20mm Radiata Pine H3.2 treated, both face castellated and 18° bevelled edges.
- (CC) CAVITY CLOSURE: Cavity closure strip, positioned to give a 15mm minimum drip edge to cladding
- (FT4) FLEXIBLE FLASHING TAPE: Flexible flashing tape lapped into corner, Refer NZBC E2/AS1 4.3.11 Flashing tape is recommended due to movement that may occur in corners. Not required by E2/AS1
- (IL) INTERNAL LINING: Selected Internal Lining
- (IN) INSULATION: Selected Insulation
- (TF) TIMBER FRAME: H1.2 min treated timber framing
- (WB) WEATHERBOARD: Selected JSC Bevel Back Weatherboard

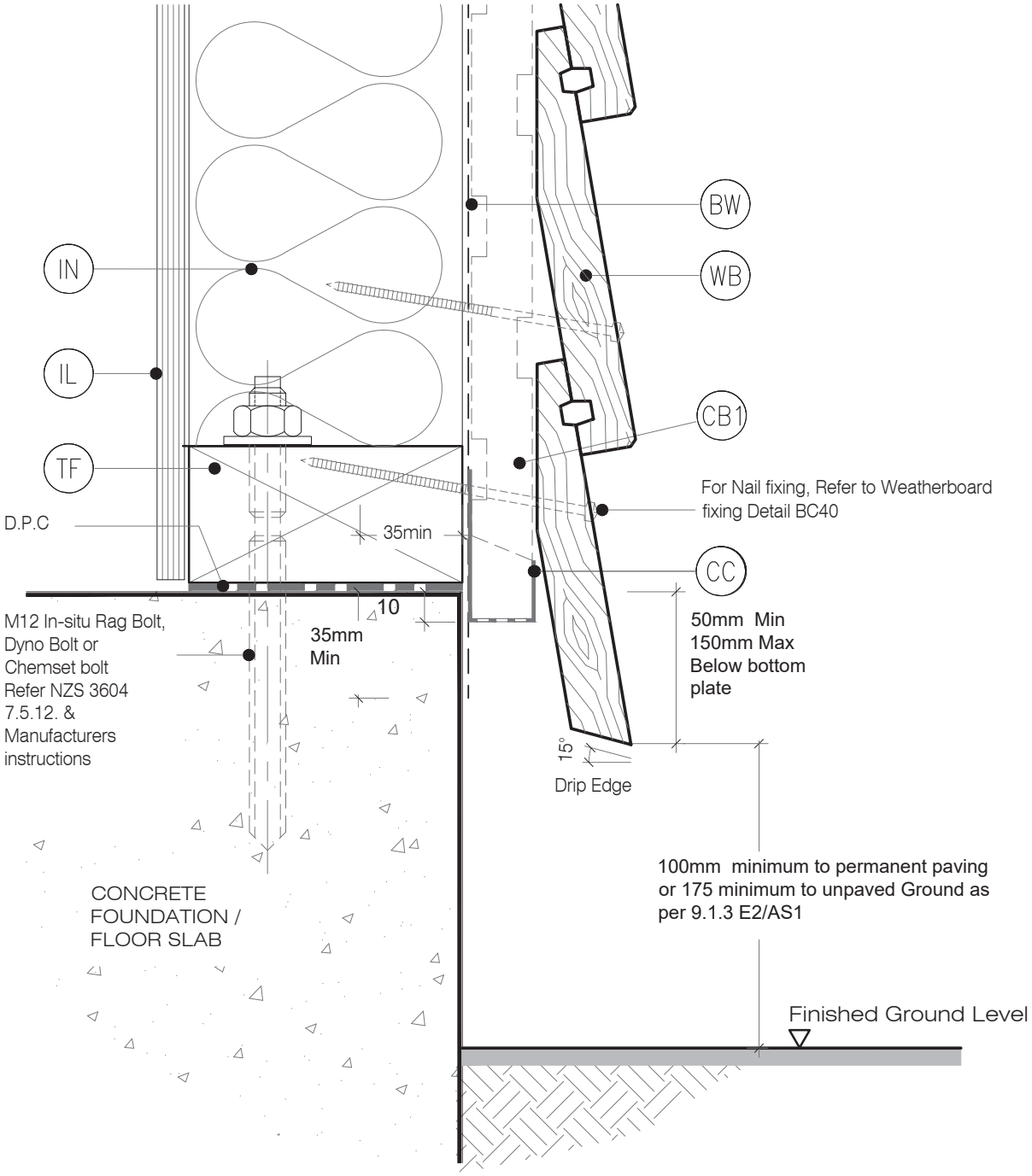

JSC PREMIUM ARCHITECTURAL & BUILDING SOLUTIONS

TYPE
BEVEL BACK WB - 20MM CAVITY FIX

NAME
Base of Wall, Concrete

- TO BE READ IN CONJUNCTION WITH COMPLETE JSC BEVELCLAD SYSTEM LITERATURE
- DETAILS MAY BE SUBJECT CHANGE WITHOUT NOTICE

CodeMark CMNZ30082

DRAWING SCALE	ISSUE DATE
1:2 @ A4	12/02/2024
DRAWING NUMBER	VERSION
JSC 20CF BC42	2.4

LEGEND:

- (BF) BACK FLASHING: Minimum 100mm Polypropylene or PVC rear flashing to provide 50mm cover past the scarf joint on each side
- (BW) BUILDING WRAP: Flexible Wall Underlay, as per NZBC E2/AS1 - Table 23. In extra high wind zones, Rigid Underlay required (9.1.7.2 E2/AS1)
- (CB1) CAVITY BATTEN - NON STRUCTURAL : Vertically installed JSC-U 45mm x 20mm Radiata Pine H3.2 treated, both face castellated and 18° bevelled edges.
- (CC) CAVITY CLOSURE: Cavity closure strip, positioned to give a 15mm minimum drip edge to cladding
- (FT4) FLEXIBLE FLASHING TAPE: Flexible flashing tape lapped into corner, Refer NZBC E2/AS1 4.3.11 Flashing tape is recommended due to movement that may occur in corners. Not required by E2/AS1
- (IL) INTERNAL LINING: Selected Internal Lining
- (IN) INSULATION: Selected Insulation
- (TF) TIMBER FRAME: H1.2 min treated timber framing
- (WB) WEATHERBOARD: Selected JSC Bevel Back Weatherboard

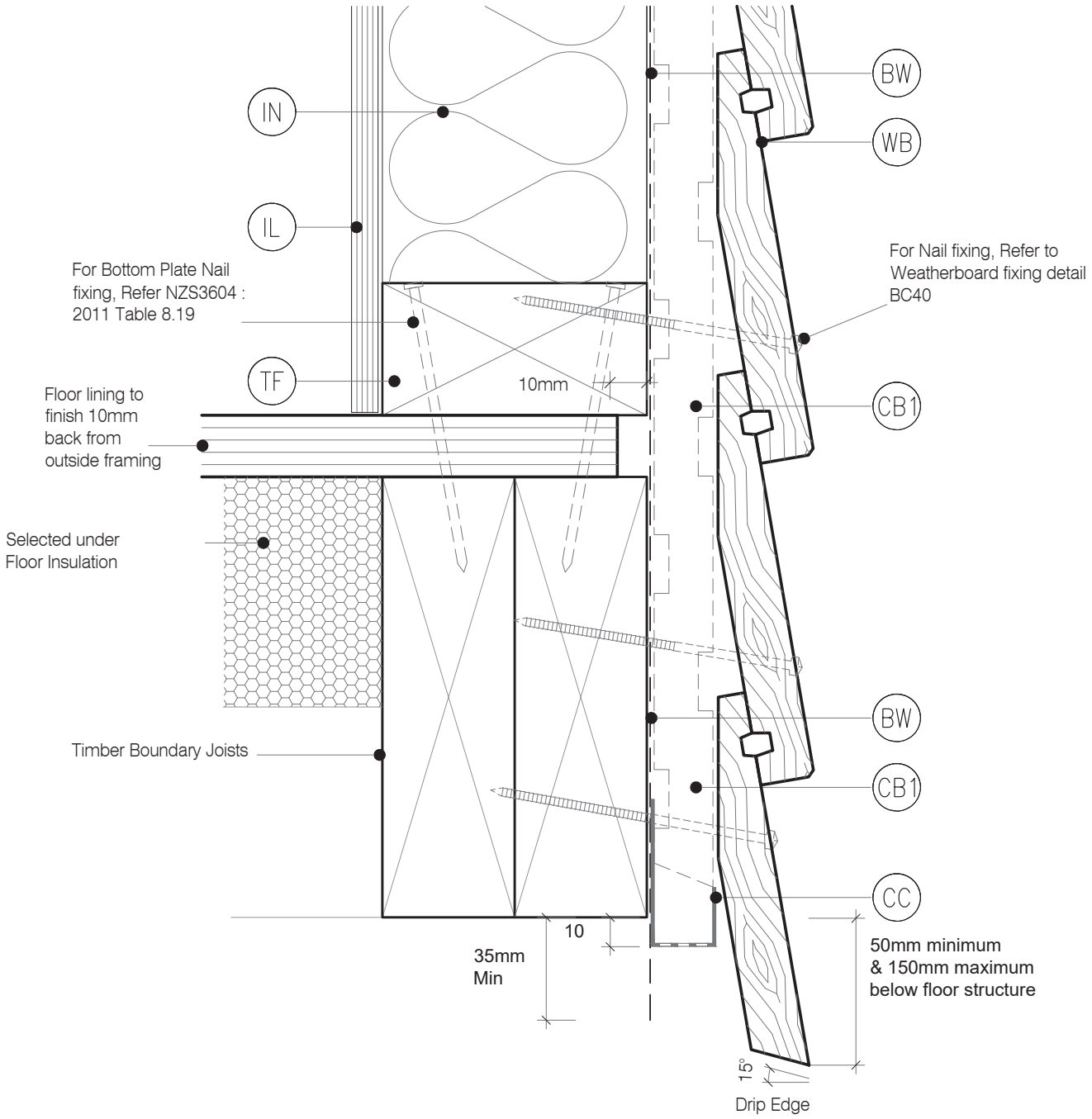

JSC PREMIUM ARCHITECTURAL & BUILDING SOLUTIONS

TYPE
BEVEL BACK WB- 20MM CAVITY FIX

NAME
Base of Wall, Timber

- TO BE READ IN CONJUNCTION WITH COMPLETE JSC BEVELCLAD SYSTEM LITERATURE
- DETAILS MAY BE SUBJECT CHANGE WITHOUT NOTICE

CodeMark CMNZ30082

DRAWING SCALE	ISSUE DATE
1:2 @ A4	12/02/2024
DRAWING NUMBER	**VERSION**
JSC 20CF BC43	2.4

LEGEND:

- (BF) BACK FLASHING: Minimum 100mm Polypropylene or PVC rear flashing to provide 50mm cover past the scarf joint on each side
- (BW) BUILDING WRAP: Flexible Wall Underlay, as per NZBC E2/AS1 - Table 23. In extra high wind zones, Rigid Underlay required (9.1.7.2 E2/AS1)
- (CB1) CAVITY BATTEN - NON STRUCTURAL : Vertically installed JSC-U 45mm x 20mm Radiata Pine H3.2 treated, both face castellated and 18° bevelled edges.
- (CC) CAVITY CLOSURE: Cavity closure strip, positioned to give a 15mm minimum drip edge to cladding
- (FT4) FLEXIBLE FLASHING TAPE: Flexible flashing tape lapped into corner, Refer NZBC E2/AS1 4.3.11 Flashing tape is recommended due to movement that may occur in corners. Not required by E2/AS1
- (IL) INTERNAL LINING: Selected Internal Lining
- (IN) INSULATION: Selected Insulation
- (TF) TIMBER FRAME: H1.2 min treated timber framing
- (WB) WEATHERBOARD: Selected JSC Bevel Back Weatherboard

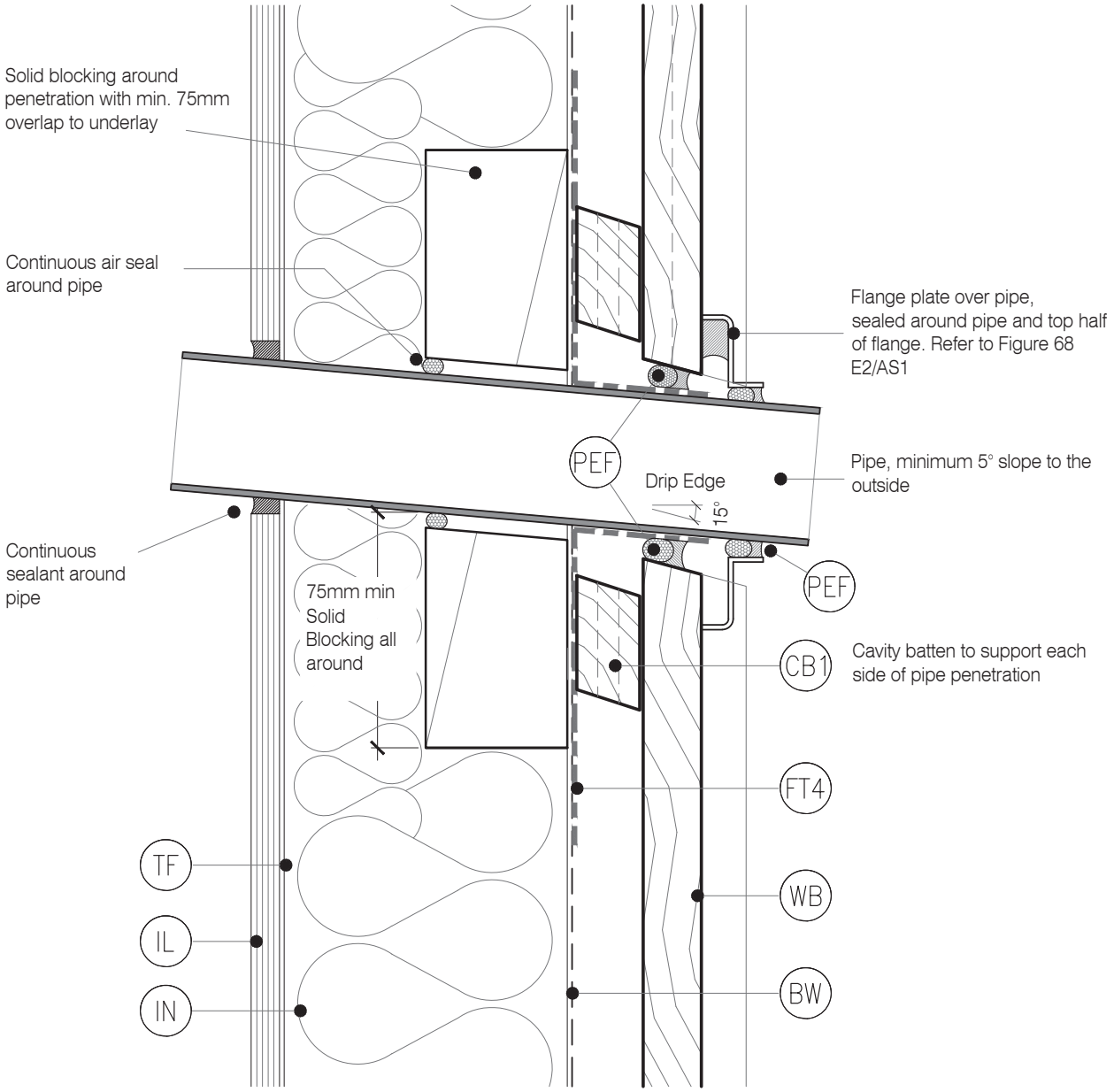

JSC PREMIUM ARCHITECTURAL & BUILDING SOLUTIONS

TYPE
BEVEL BACK WB - 20MM CAVITY FIX

NAME
Pipe Penetration

- TO BE READ IN CONJUNCTION WITH COMPLETE JSC BEVELCLAD SYSTEM LITERATURE
- DETAILS MAY BE SUBJECT CHANGE WITHOUT NOTICE

CodeMark CMNZ30082

DRAWING SCALE	ISSUE DATE
1:2 @ A4	12/02/2024
DRAWING NUMBER	VERSION
JSC 20CF BC44	2.4

LEGEND:

- (BF) BACK FLASHING: Minimum 100mm Polypropylene or PVC rear flashing to provide 50mm cover past the scarf joint on each side
- (BW) BUILDING WRAP: Flexible Wall Underlay, as per NZBC E2/AS1 - Table 23. In extra high wind zones, Rigid Underlay required (9.1.7.2 E2/AS1)
- (CB1) CAVITY BATTEN - NON STRUCTURAL : Vertically installed JSC-U 45mm x 20mm Radiata Pine H3.2 treated, both face castellated and 18° bevelled edges.
- (CC) CAVITY CLOSURE: Cavity closure strip, positioned to give a 15mm minimum drip edge to cladding
- (FT4) FLEXIBLE FLASHING TAPE: Flexible flashing tape lapped into corner, Refer NZBC E2/AS1 4.3.11 Flashing tape is recommended due to movement that may occur in corners. Not required by E2/AS1
- (IL) INTERNAL LINING: Selected Internal Lining
- (IN) INSULATION: Selected Insulation
- (TF) TIMBER FRAME: H1.2 min treated timber framing
- (WB) WEATHERBOARD: Selected JSC Bevel Back Weatherboard

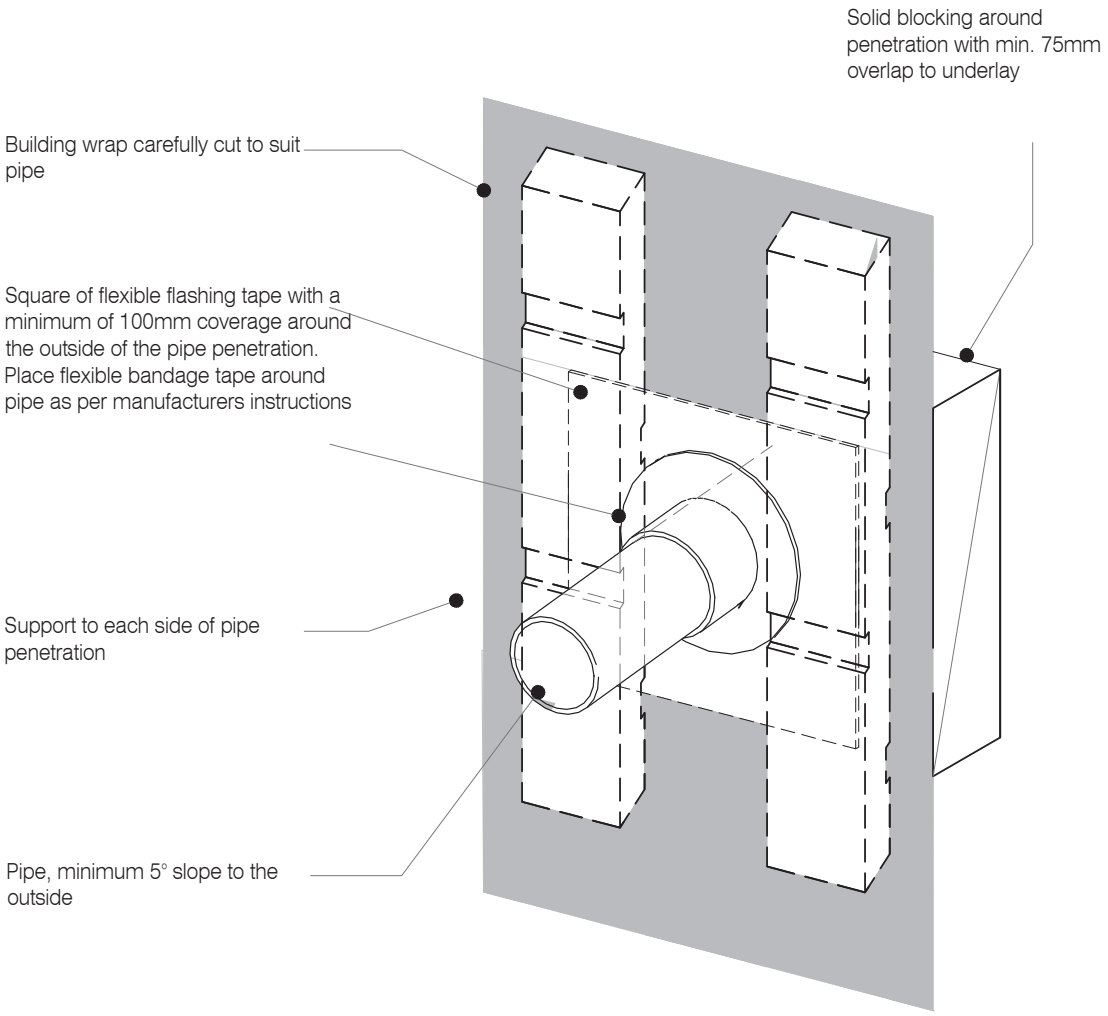

JSC PREMIUM ARCHITECTURAL & BUILDING SOLUTIONS

TYPE
BEVEL BACK WB - 20MM CAVITY FIX

NAME
3D - Pipe Penetration

- TO BE READ IN CONJUNCTION WITH COMPLETE JSC BEVELCLAD SYSTEM LITERATURE
- DETAILS MAY BE SUBJECT CHANGE WITHOUT NOTICE

CodeMark CMNZ30082

DRAWING SCALE	ISSUE DATE
1:2 @ A4	12/02/2024

DRAWING NUMBER	VERSION
JSC 20CF BC45	2.4

LEGEND:

(BW) BUILDING WRAP: Flexible Wall Underlay, As per NZBC E2/AS1 - Table 23, In extra high wind zones, Rigid Underlay required (9.1.7.2 E2/AS1)

(CB1) CAVITY BATTEN - NON STRUCTURAL : Vertically installed JSC-U 45mm x 20mm Radiata Pine H3.2 treated, both face castellated and 18° bevelled edges. Site machined to allow for flashing.

(WB) WEATHERBOARD: Selected JSC Bevel Back Weatherboard

(CF) CORNER FLASHING: Aluminium, PVC or Stainless Steel corner flashing. Refer NZBC E2/AS1 Section 4.3 "Acceptable flashing materials" Minimum Flashing Size (mm) as per NZBC E2/AS1 Section 4.5.1:

FLASHING TYPE	L,M,H & VH Wind Zones	EH Wind Zones
Hemmed	50X50	75X75
Unhemmed	75x75	100x100

(FT3) FLEXIBLE FLASHING TAPE: Flexible flashing tape lapped into corner, Refer NZBC E2/AS1 4.3.11 Flashing tape is recommended due to movement that may occur in corners. Not required by E2/AS1

(IL) INTERNAL LINING: Selected Internal Lining

(IN) INSULATION: Selected Insulation

(TF) TIMBER FRAME: H1.2 min treated timber framing

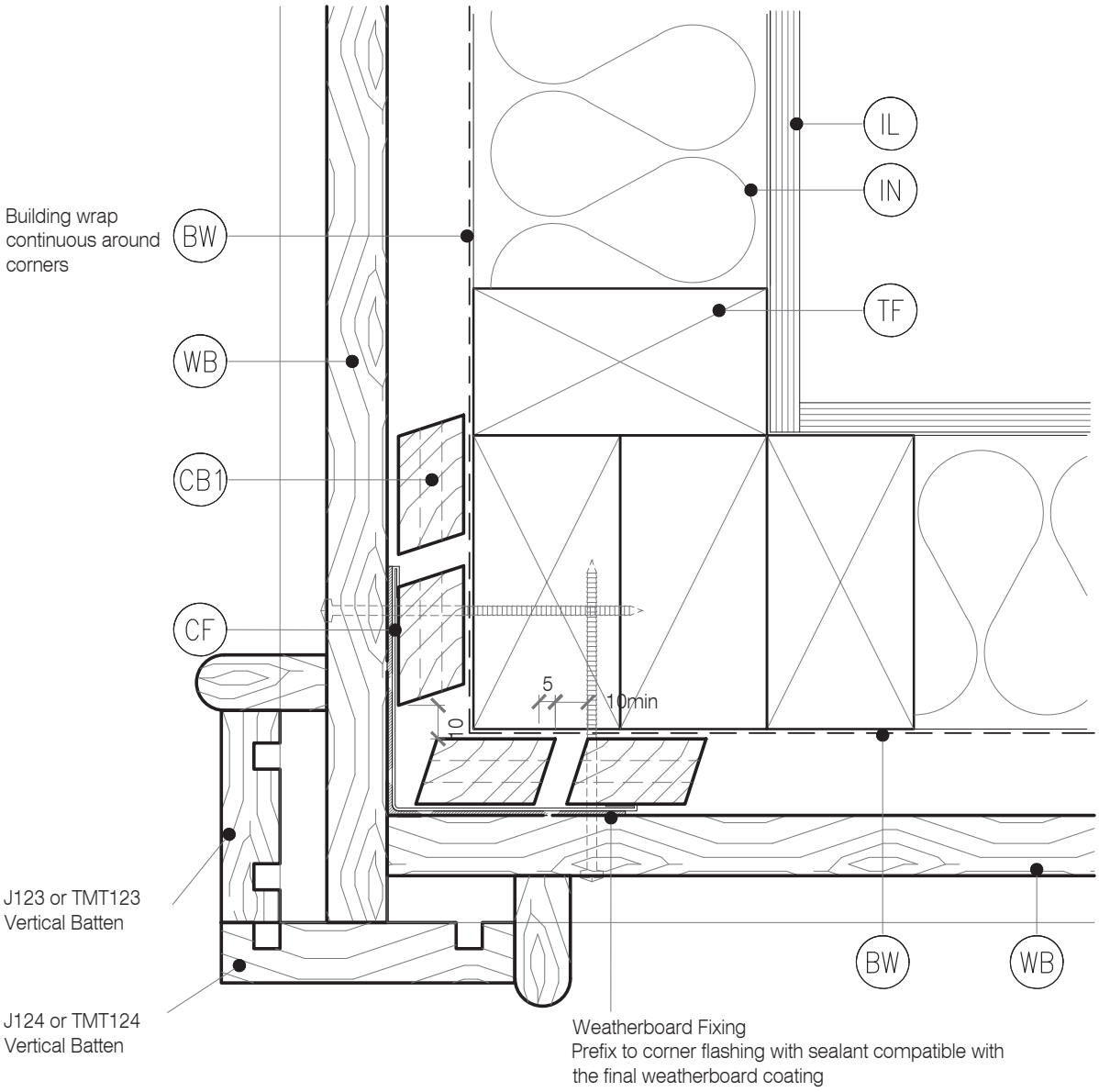

JSC PREMIUM ARCHITECTURAL & BUILDING SOLUTIONS

TYPE
BEVEL BACK WB - 20MM CAVITY FIX

NAME
External Corner - Boxed

- TO BE READ IN CONJUNCTION WITH COMPLETE JSC BEVELCLAD SYSTEM LITERATURE
- DETAILS MAY BE SUBJECT CHANGE WITHOUT NOTICE

CodeMark CMNZ30082

DRAWING SCALE	ISSUE DATE
1:2 @ A4	12/02/2024

DRAWING NUMBER	VERSION
JSC 20CF BC50	2.4

LEGEND:

(BW) BUILDING WRAP: Flexible Wall Underlay, As per NZBC E2/AS1 - Table 23, In extra high wind zones, Rigid Underlay required (9.1.7.2 E2/AS1)

(CB1) CAVITY BATTEN - NON STRUCTURAL : Vertically installed JSC-U 45mm x 20mm Radiata Pine H3.2 treated, both face castellated and 18° bevelled edges. Site machined to allow for flashing.

(WB) WEATHERBOARD: Selected JSC Bevel Back Weatherboard

(CF) CORNER FLASHING: Aluminium, PVC or Stainless Steel corner flashing. Refer NZBC E2/AS1 Section 4.3 "Acceptable flashing materials" Minimum Flashing Size (mm) as per NZBC E2/AS1 Section 4.5.1:

FLASHING TYPE	L,M,H & VH Wind Zones	EH Wind Zones
Hemmed	50X50	75X75
Unhemmed	75x75	100x100

(FT3) FLEXIBLE FLASHING TAPE: Flexible flashing tape lapped into corner, Refer NZBC E2/AS1 4.3.11 Flashing tape is recommended due to movement that may occur in corners. Not required by E2/AS1

(IL) INTERNAL LINING: Selected Internal Lining

(IN) INSULATION: Selected Insulation

(TF) TIMBER FRAME: H1.2 min treated timber framing

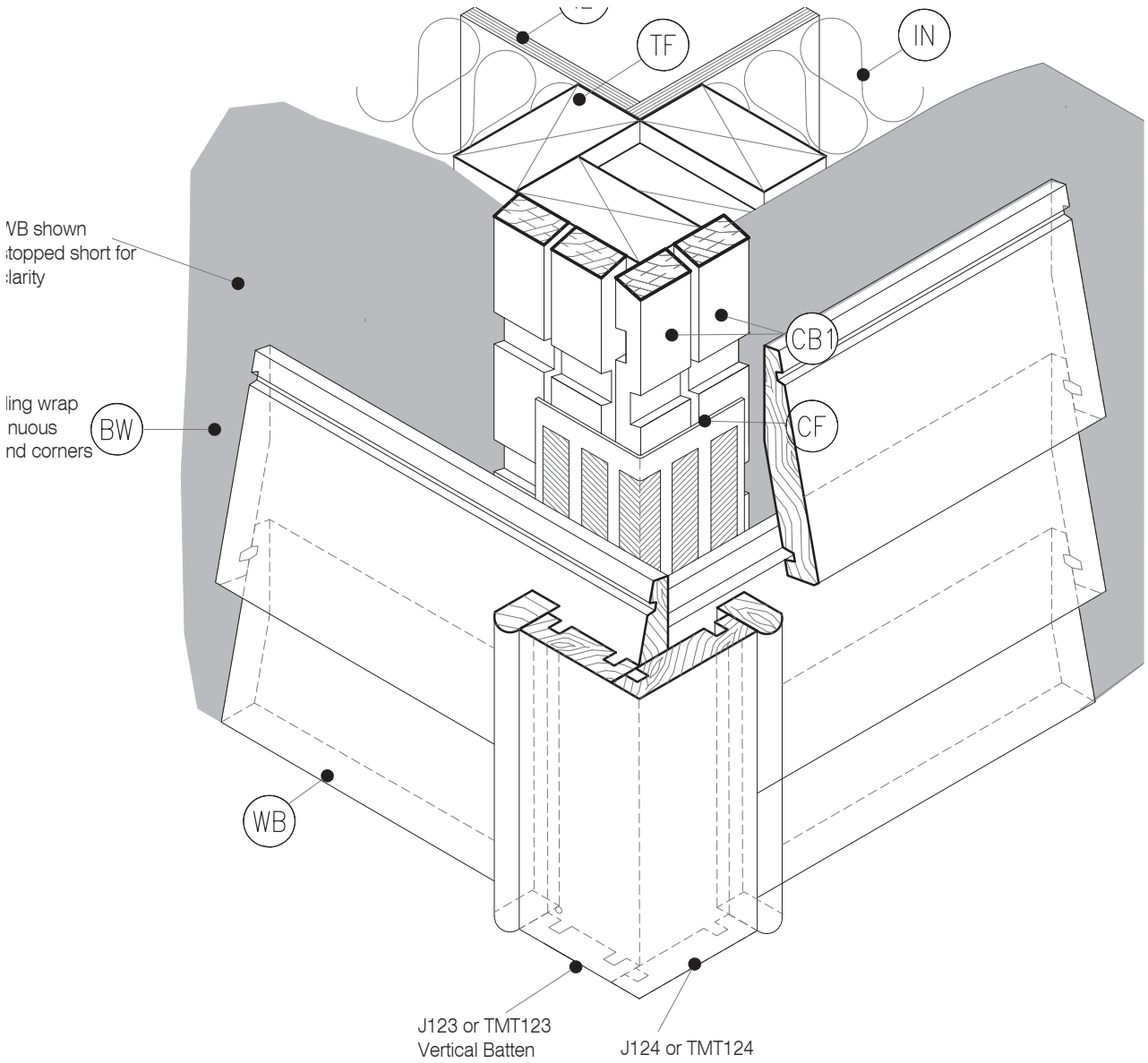

TYPE
BEVEL BACK WB - 20MM CAVITY FIX

NAME
3D - External Corner - Boxed

- TO BE READ IN CONJUNCTION WITH COMPLETE JSC BEVELCLAD SYSTEM LITERATURE
- DETAILS MAY BE SUBJECT CHANGE WITHOUT NOTICE

CodeMark
CMNZ30082

DRAWING SCALE	ISSUE DATE
1:2 @ A4	12/02/2024

DRAWING NUMBER	VERSION
JSC 20CF BC51	2.4

LEGEND:

- (BW) BUILDING WRAP: Flexible Wall Underlay, As per NZBC E2/AS1 - Table 23, In extra high wind zones, Rigid Underlay required (9.1.7.2 E2/AS1)
- (CB1) CAVITY BATTEN - NON STRUCTURAL : Vertically installed JSC-U 45mm x 20mm Radiata Pine H3.2 treated, both face castellated and 18° bevelled edges. Site machined to allow for flashing.
- (WB) WEATHERBOARD: Selected JSC Bevel Back Weatherboard
- (CF) CORNER FLASHING: Aluminium, PVC or Stainless Steel corner flashing. Refer NZBC E2/AS1 Section 4.3 "Acceptable flashing materials" Minimum Flashing Size (mm) as per NZBC E2/AS1 Section 4.5.1:

FLASHING TYPE	L,M,H & VH Wind Zones	EH Wind Zones
Hemmed	50X50	75X75
Unhemmed	75x75	100x100

- (FT3) FLEXIBLE FLASHING TAPE: Flexible flashing tape lapped into corner, Refer NZBC E2/AS1 4.3.11 Flashing tape is recommended due to movement that may occur in corners. Not required by E2/AS1
- (IL) INTERNAL LINING: Selected Internal Lining
- (IN) INSULATION: Selected Insulation
- (TF) TIMBER FRAME: H1.2 min treated timber framing

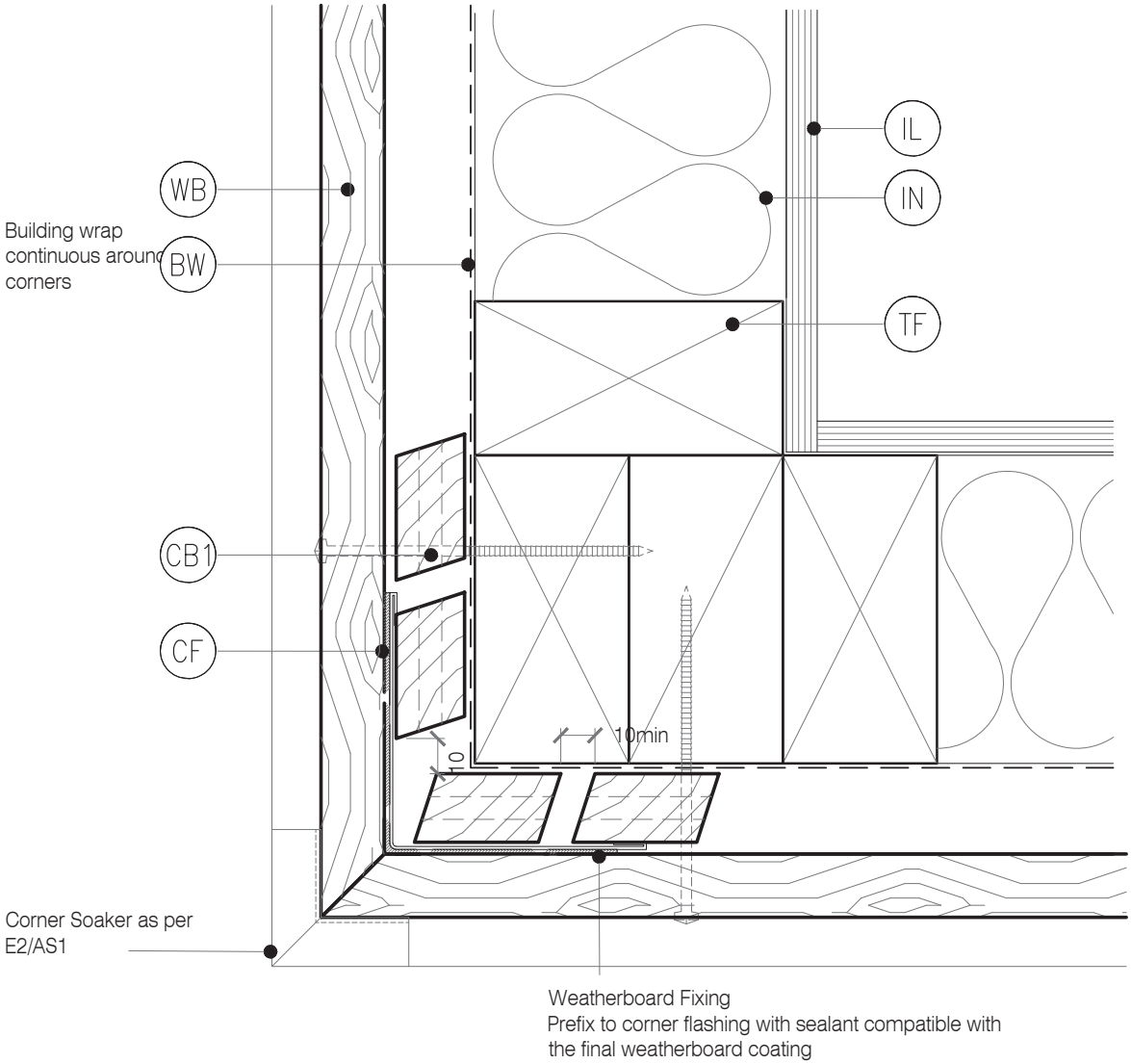

DETAIL NOTES:

1. For VH and EH wind zones a solid batten (non-castellated) is required down one significant side

JSC PREMIUM ARCHITECTURAL & BUILDING SOLUTIONS

TYPE
BEVEL BACK WB - 20MM CAVITY FIX

NAME
External Corner - Soaker

- TO BE READ IN CONJUNCTION WITH COMPLETE JSC BEVELCLAD SYSTEM LITERATURE
- DETAILS MAY BE SUBJECT CHANGE WITHOUT NOTICE

CodeMark CMNZ30082

DRAWING SCALE	ISSUE DATE
1:2 @ A4	12/02/2024

DRAWING NUMBER	VERSION
JSC 20CF BC52	2.4

LEGEND:

(BW) BUILDING WRAP: Flexible Wall Underlay, As per NZBC E2/AS1 - Table 23, In extra high wind zones, Rigid Underlay required (9.1.7.2 E2/AS1)

(CB1) CAVITY BATTEN - NON STRUCTURAL : Vertically installed JSC-U 45mm x 20mm Radiata Pine H3.2 treated, both face castellated and 18° bevelled edges. Site machined to allow for flashing.

(WB) WEATHERBOARD: Selected JSC Bevel Back Weatherboard

(CF) CORNER FLASHING: Aluminium, PVC or Stainless Steel corner flashing. Refer NZBC E2/AS1 Section 4.3 "Acceptable flashing materials" Minimum Flashing Size (mm) as per NZBC E2/AS1 Section 4.5.1:

FLASHING TYPE	L,M,H & VH Wind Zones	EH Wind Zones
Hemmed	50X50	75X75
Unhemmed	75x75	100x100

(FT3) FLEXIBLE FLASHING TAPE: Flexible flashing tape lapped into corner, Refer NZBC E2/AS1 4.3.11 Flashing tape is recommended due to movement that may occur in corners. Not required by E2/AS1

(IL) INTERNAL LINING: Selected Internal Lining

(IN) INSULATION: Selected Insulation

(TF) TIMBER FRAME: H1.2 min treated timber framing

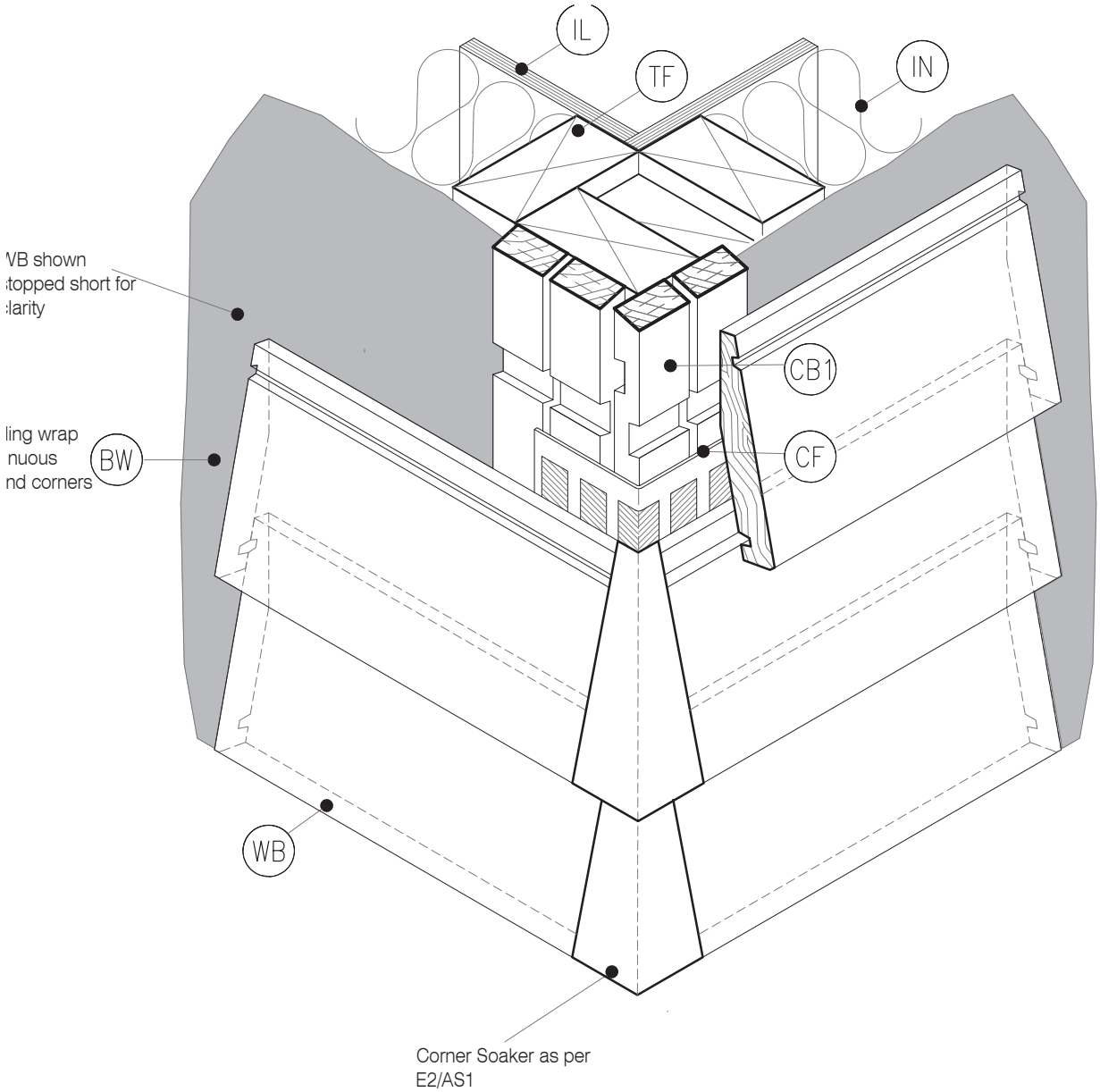

TYPE
BEVEL BACK WB - 20MM CAVITY FIX

NAME
3D - External Corner - Soaker

- TO BE READ IN CONJUNCTION WITH COMPLETE JSC BEVELCLAD SYSTEM LITERATURE
- DETAILS MAY BE SUBJECT CHANGE WITHOUT NOTICE

CodeMark
CMNZ30082

DRAWING SCALE	ISSUE DATE
1:2 @ A4	12/02/2024

DRAWING NUMBER	VERSION
JSC 20CF BC53	2.4

LEGEND:

- (BW) BUILDING WRAP: Flexible Wall Underlay, As per NZBC E2/AS1 - Table 23, In extra high wind zones, Rigid Underlay required (9.1.7.2 E2/AS1)
- (CB1) CAVITY BATTEN - NON STRUCTURAL : Vertically installed JSC-U 45mm x 20mm Radiata Pine H3.2 treated, both face castellated and 18° bevelled edges. Site machined to allow for flashing.
- (WB) WEATHERBOARD: Selected JSC Bevel Back Weatherboard
- (CF) CORNER FLASHING: Aluminium, PVC or Stainless Steel corner flashing. Refer NZBC E2/AS1 Section 4.3 "Acceptable flashing materials" Minimum Flashing Size (mm) as per NZBC E2/AS1 Section 4.5.1:

FLASHING TYPE	L,M,H & VH Wind Zones	EH Wind Zones
Hemmed	50X50	75X75
Unhemmed	75x75	100x100

- (FT3) FLEXIBLE FLASHING TAPE: Flexible flashing tape lapped into corner, Refer NZBC E2/AS1 4.3.11 Flashing tape is recommended due to movement that may occur in corners. Not required by E2/AS1
- (IL) INTERNAL LINING: Selected Internal Lining
- (IN) INSULATION: Selected Insulation
- (TF) TIMBER FRAME: H1.2 min treated timber framing

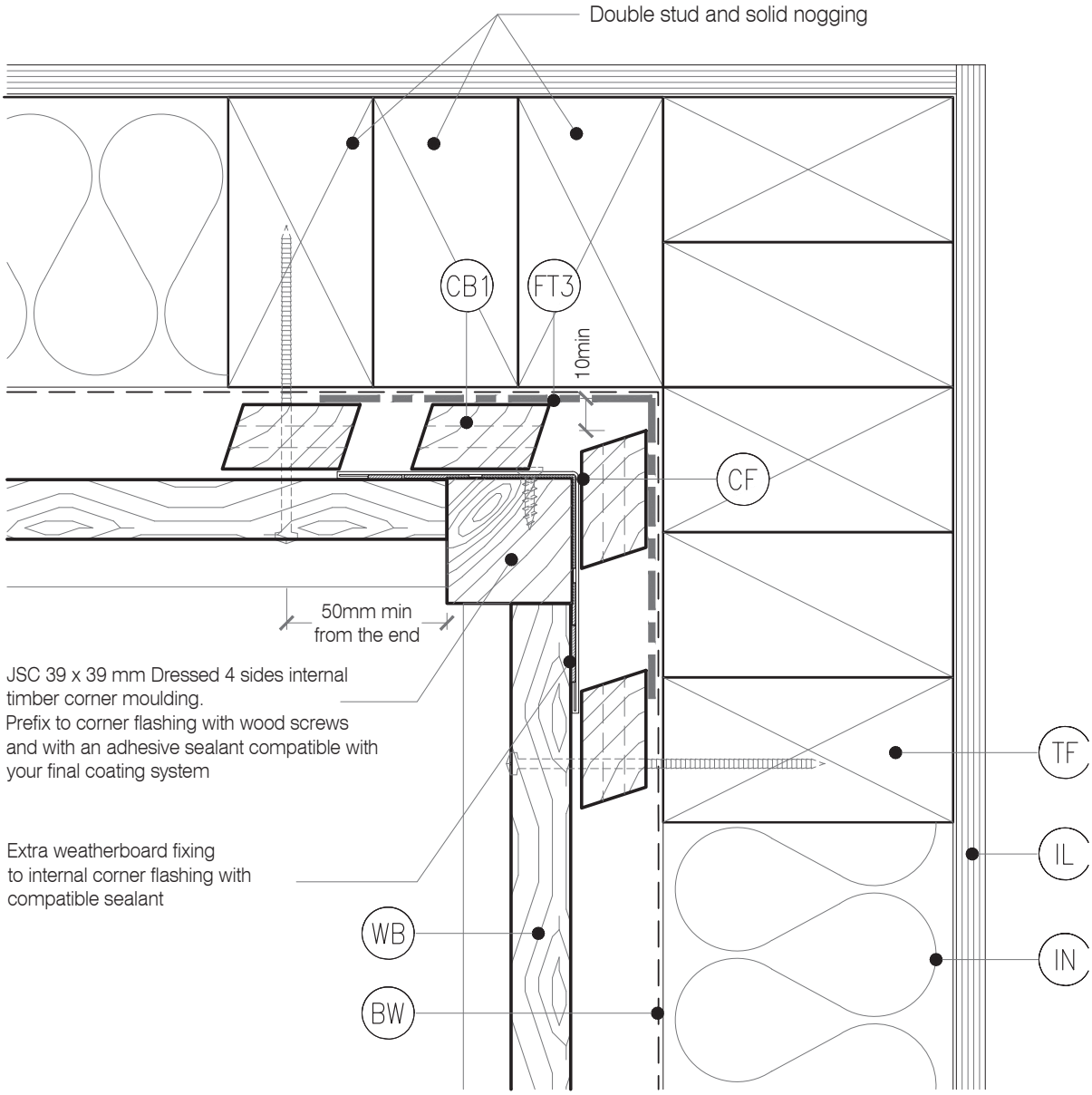

DETAIL NOTES:

1. Flashing tape is recommended due to movement that may occur in corners but it is not required by E2/AS1
2. Aluminium extrusion must not be continuous over solid floor joists.

JSC PREMIUM ARCHITECTURAL & BUILDING SOLUTIONS

TYPE
BEVEL BACK WB - 20MM CAVITY FIX

NAME
Internal Corner - J101

- TO BE READ IN CONJUNCTION WITH COMPLETE JSC BEVELCLAD SYSTEM LITERATURE
- DETAILS MAY BE SUBJECT CHANGE WITHOUT NOTICE

CodeMark CMNZ30082

DRAWING SCALE	ISSUE DATE
1:2 @ A4	12/02/2024
DRAWING NUMBER	VERSION
JSC 20CF BC60	2.4

LEGEND:

- (BW) BUILDING WRAP: Flexible Wall Underlay, As per NZBC E2/AS1 - Table 23, In extra high wind zones, Rigid Underlay required (9.1.7.2 E2/AS1)
- (CB1) CAVITY BATTEN - NON STRUCTURAL : Vertically installed JSC-U 45mm x 20mm Radiata Pine H3.2 treated, both face castellated and 18° bevelled edges. Site machined to allow for flashing.
- (WB) WEATHERBOARD: Selected JSC Bevel Back Weatherboard
- (CF) CORNER FLASHING: Aluminium, PVC or Stainless Steel corner flashing. Refer NZBC E2/AS1 Section 4.3 "Acceptable flashing materials" Minimum Flashing Size (mm) as per NZBC E2/AS1 Section 4.5.1:

FLASHING TYPE	L,M,H & VH Wind Zones	EH Wind Zones
Hemmed	50X50	75X75
Unhemmed	75x75	100x100

- (FT3) FLEXIBLE FLASHING TAPE: Flexible flashing tape lapped into corner, Refer NZBC E2/AS1 4.3.11 Flashing tape is recommended due to movement that may occur in corners. Not required by E2/AS1
- (IL) INTERNAL LINING: Selected Internal Lining
- (IN) INSULATION: Selected Insulation
- (TF) TIMBER FRAME: H1.2 min treated timber framing

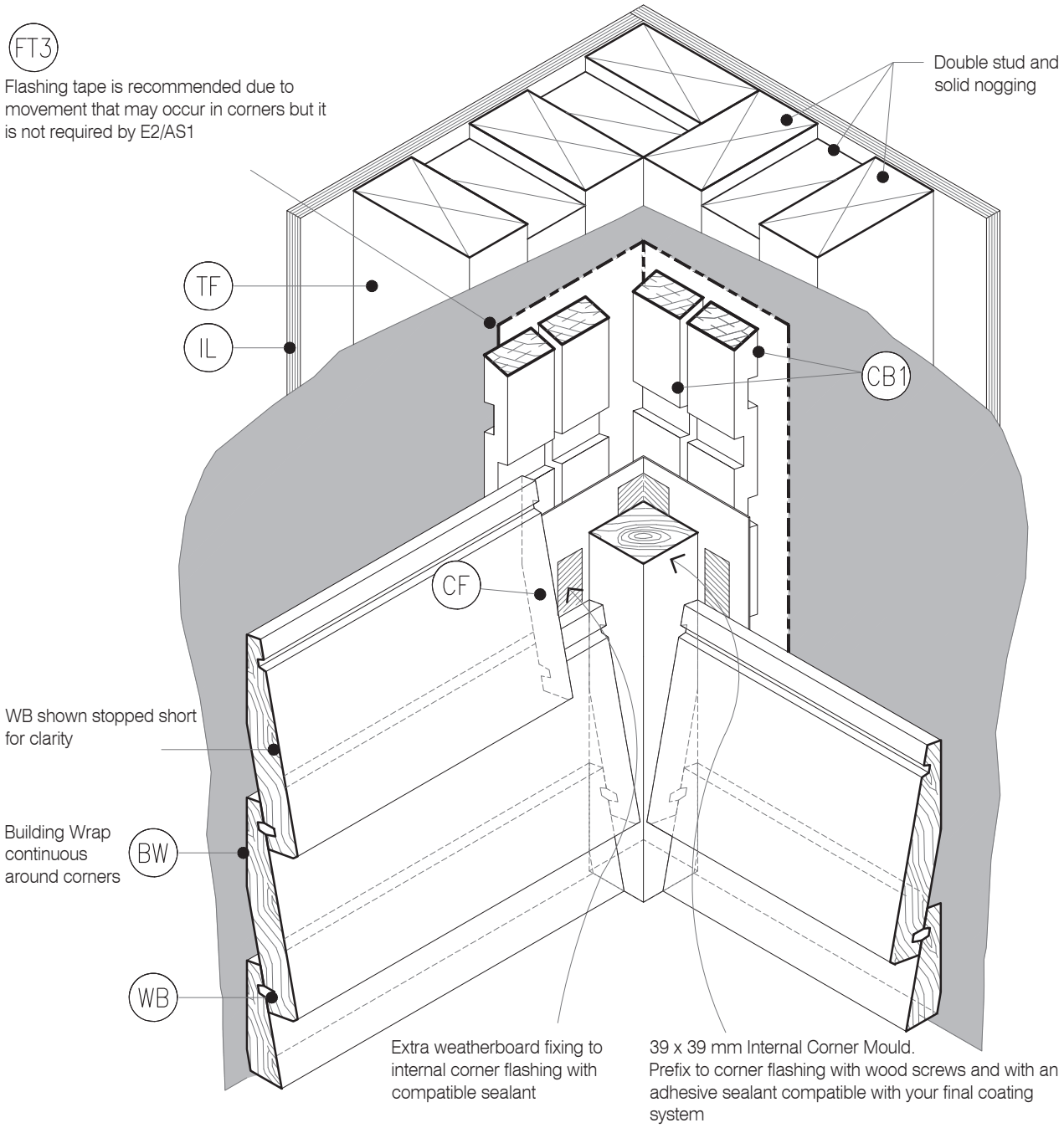

JSC PREMIUM ARCHITECTURAL & BUILDING SOLUTIONS

TYPE
BEVEL BACK WB - 20MM CAVITY FIX

NAME
3D - Internal Corner - J101

- TO BE READ IN CONJUNCTION WITH COMPLETE JSC BEVELCLAD SYSTEM LITERATURE
- DETAILS MAY BE SUBJECT CHANGE WITHOUT NOTICE

CodeMark CMNZ30082

DRAWING SCALE	ISSUE DATE
1:2 @ A4	12/02/2024
DRAWING NUMBER	VERSION
JSC 20CF BC61	2.4

LEGEND:

- (BW) BUILDING WRAP: Flexible Wall Underlay, As per NZBC E2/AS1 - Table 23, In extra high wind zones, Rigid Underlay required (9.1.7.2 E2/AS1)
- (CB1) CAVITY BATTEN - NON STRUCTURAL : Vertically installed JSC-U 45mm x 20mm Radiata Pine H3.2 treated, both face castellated and 18° bevelled edges. Site machined to allow for flashing.
- (WB) WEATHERBOARD: Selected JSC Bevel Back Weatherboard
- (CF) CORNER FLASHING: Aluminium, PVC or Stainless Steel corner flashing. Refer NZBC E2/AS1 Section 4.3 "Acceptable flashing materials" Minimum Flashing Size (mm) as per NZBC E2/AS1 Section 4.5.1:

FLASHING TYPE	L,M,H & VH Wind Zones	EH Wind Zones
Hemmed	50X50	75X75
Unhemmed	75x75	100x100

- (FT3) FLEXIBLE FLASHING TAPE: Flexible flashing tape lapped into corner, Refer NZBC E2/AS1 4.3.11 Flashing tape is recommended due to movement that may occur in corners. Not required by E2/AS1
- (IL) INTERNAL LINING: Selected Internal Lining
- (IN) INSULATION: Selected Insulation
- (TF) TIMBER FRAME: H1.2 min treated timber framing

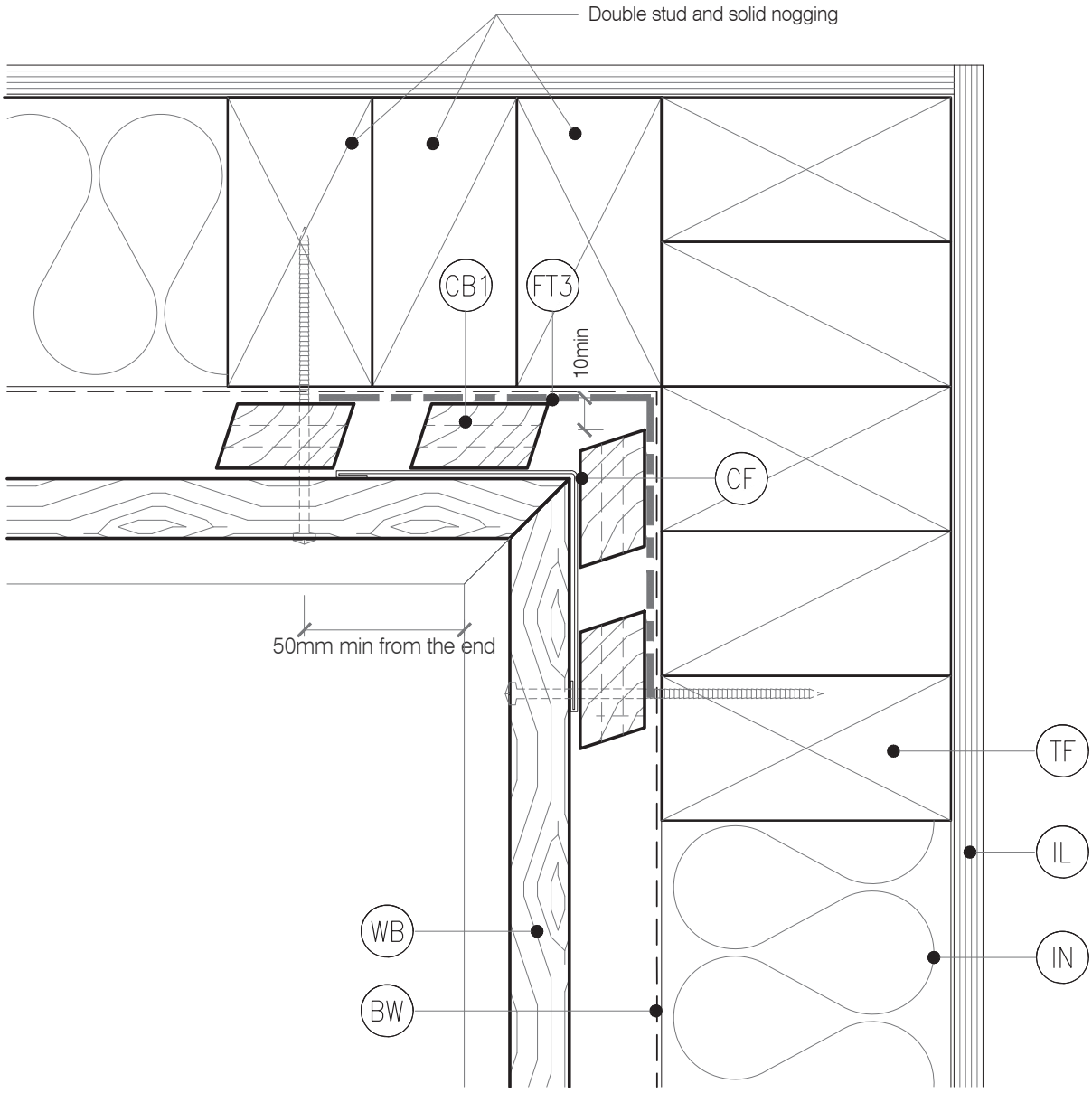

DETAIL NOTES:

1. Flashing tape is recommended due to movement that may occur in corners but it is not required by E2/AS1
2. Aluminium extrusion must not be continuous over solid floor joists.

JSC PREMIUM ARCHITECTURAL & BUILDING SOLUTIONS

TYPE
BEVEL BACK WB - 20MM CAVITY FIX

NAME
Internal Corner

- TO BE READ IN CONJUNCTION WITH COMPLETE JSC BEVELCLAD SYSTEM LITERATURE
- DETAILS MAY BE SUBJECT CHANGE WITHOUT NOTICE

CodeMark CMNZ30082

DRAWING SCALE	ISSUE DATE
1:2 @ A4	12/02/2024
DRAWING NUMBER	VERSION
JSC 20CF BC62	2.4

LEGEND:

- (BW) BUILDING WRAP: Flexible Wall Underlay, As per NZBC E2/AS1 - Table 23, In extra high wind zones, Rigid Underlay required (9.1.7.2 E2/AS1)
- (CB1) CAVITY BATTEN - NON STRUCTURAL : Vertically installed JSC-U 45mm x 20mm Radiata Pine H3.2 treated, both face castellated and 18° bevelled edges. Site machined to allow for flashing.
- (WB) WEATHERBOARD: Selected JSC Bevel Back Weatherboard
- (CF) CORNER FLASHING: Aluminium, PVC or Stainless Steel corner flashing. Refer NZBC E2/AS1 Section 4.3 "Acceptable flashing materials" Minimum Flashing Size (mm) as per NZBC E2/AS1 Section 4.5.1:

FLASHING TYPE	L,M,H & VH Wind Zones	EH Wind Zones
Hemmed	50X50	75X75
Unhemmed	75x75	100x100

- (FT3) FLEXIBLE FLASHING TAPE: Flexible flashing tape lapped into corner, Refer NZBC E2/AS1 4.3.11 Flashing tape is recommended due to movement that may occur in corners. Not required by E2/AS1
- (IL) INTERNAL LINING: Selected Internal Lining
- (IN) INSULATION: Selected Insulation
- (TF) TIMBER FRAME: H1.2 min treated timber framing

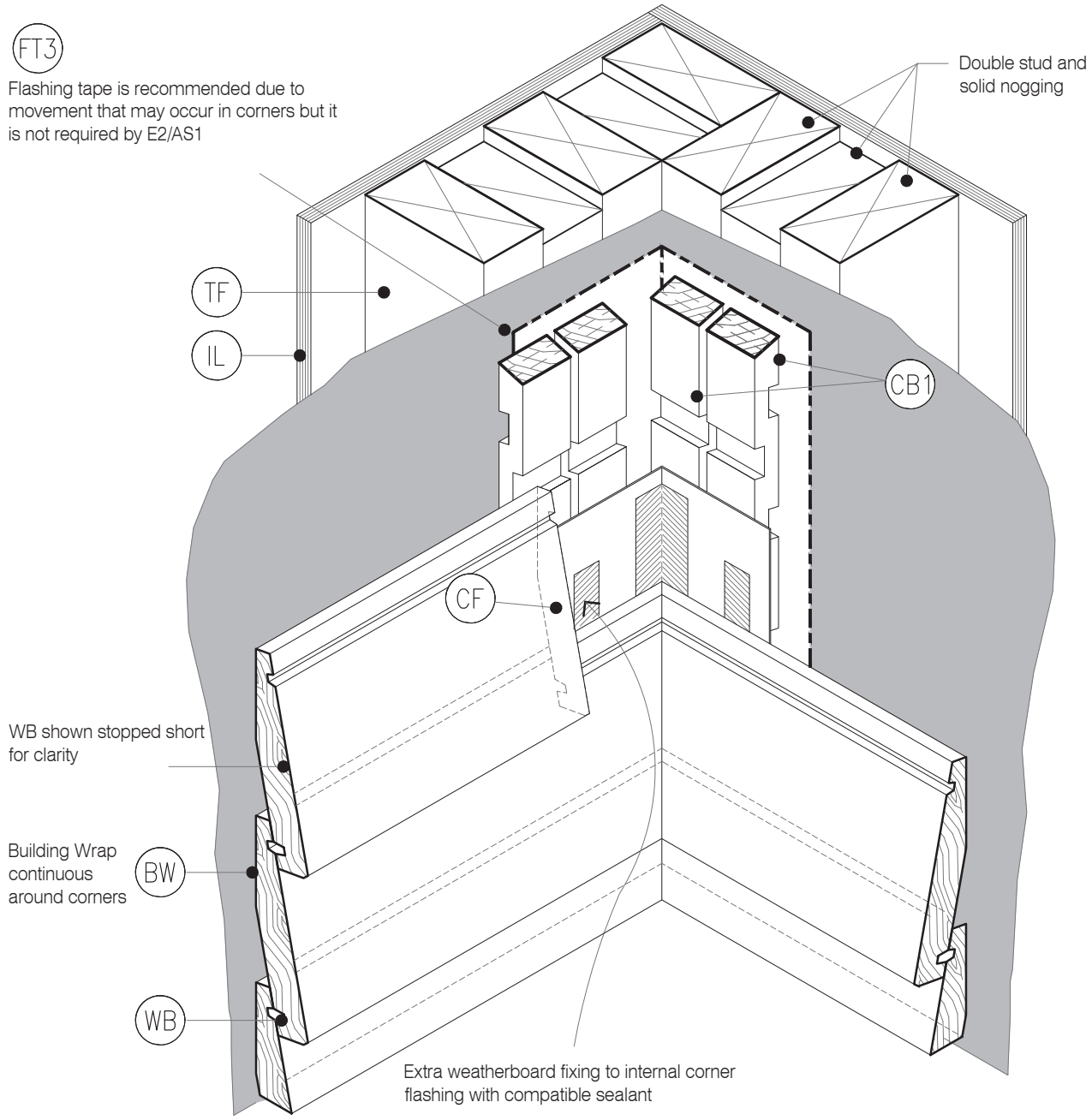

JSC PREMIUM ARCHITECTURAL & BUILDING SOLUTIONS

TYPE
BEVEL BACK WB - 20MM CAVITY FIX

NAME
3D - Internal Corner

- TO BE READ IN CONJUNCTION WITH COMPLETE JSC BEVELCLAD SYSTEM LITERATURE
- DETAILS MAY BE SUBJECT CHANGE WITHOUT NOTICE

CodeMark CMNZ30082

DRAWING SCALE	ISSUE DATE
1:2 @ A4	12/02/2024
DRAWING NUMBER	VERSION
JSC 20CF BC63	2.4

LEGEND:

- (BW) BUILDING WRAP: Flexible Wall Underlay, As per NZBC E2/AS1 - Table 23, In extra high wind zones, Rigid Underlay required (9.1.7.2 E2/AS1)
- (CB1) CAVITY BATTEN - NON STRUCTURAL : Vertically installed JSC-U 45mm x 20mm Radiata Pine H3.2 treated, both face castellated and 18° bevelled edges. Site machined to allow for flashing.
- (CC) CAVITY CLOSURE: Cavity closure strip, positioned to give a 15mm Min drip edge to cladding
- (CF) CAP FLASHING: Continuous parapet flashing. Materials as per E2/AS1 4.3 + Figure 9 & Table 7
- (FT) FLASHING TAPE: As per E2/AS1 4.3.11
- (IL) INTERNAL LINING: Selected Internal Lining
- (IN) INSULATION: Selected Insulation
- (PSF) PARAPET SADDLE FLASHING: Materials as per E2/AS1 4.0, refer E2/AS1 Figure 11 & 12 . Typically 0.45mm Min 316 Stainless Steel. Refer Table 20 & Table 21 for Comparability of Materials in Contact
- (PB) PLYWOOD BACKING: 17mm CCA treated H3.2 grade plywood substrate
- (RM) ROOFING MEMBRANE: Selected System on 17mm CCA treated H3.2 grade plywood glued and screwed to Rafters. Roof Membrane requires 400mm solid block support each way & solid support to all sheet edges
- (TF) TIMBER FRAME: H1.2 min treated timber framing
- (WB) WEATHERBOARD: Selected JSC Bevel Back Weatherboard

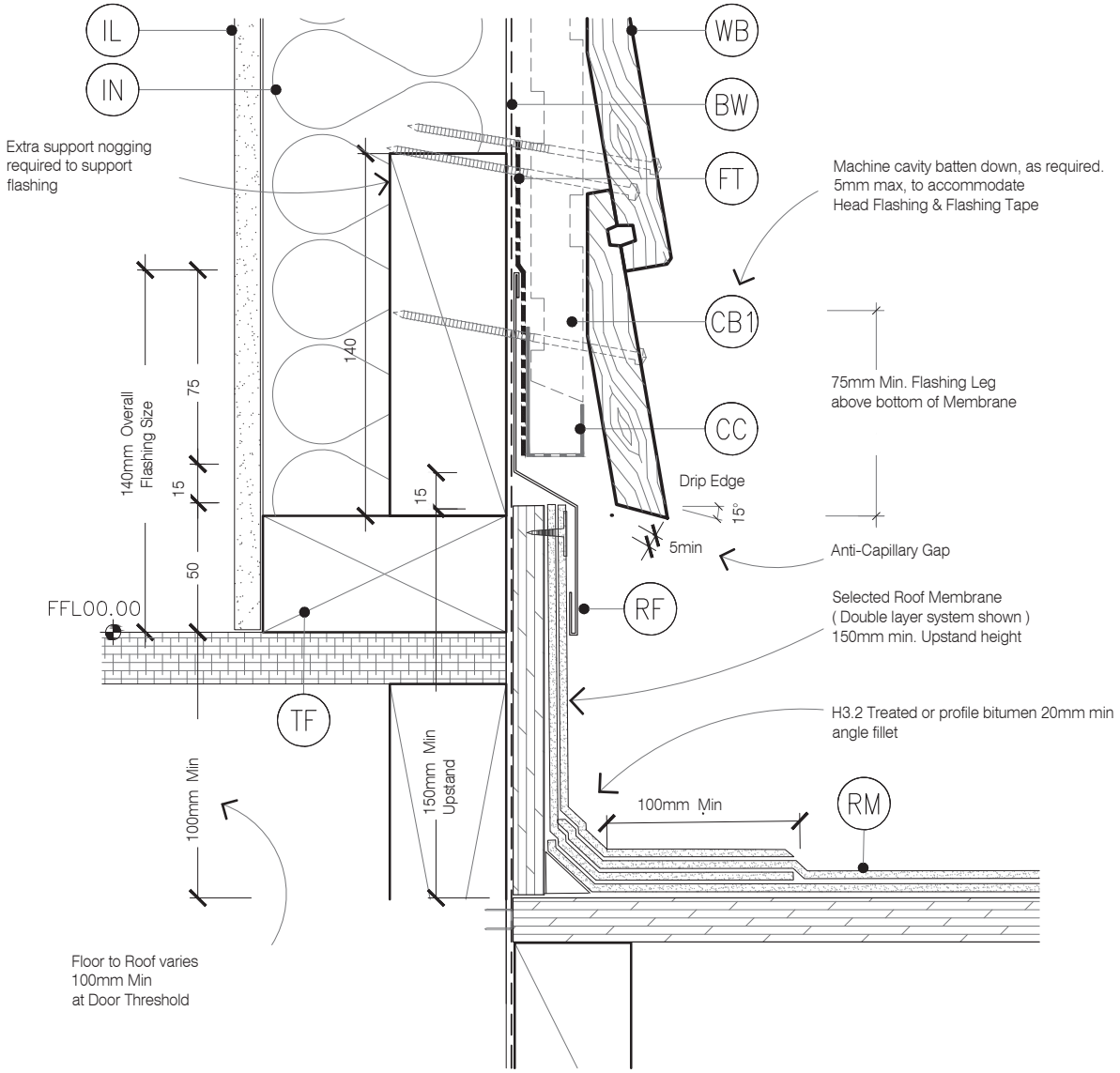

JSC PREMIUM ARCHITECTURAL & BUILDING SOLUTIONS

TYPE
BEVEL BACK WB - 20MM CAVITY FIX

NAME
Base of Wall, Membrane Roof

- TO BE READ IN CONJUNCTION WITH COMPLETE JSC BEVELCLAD SYSTEM LITERATURE
- DETAILS MAY BE SUBJECT CHANGE WITHOUT NOTICE

CodeMark CMNZ30082

DRAWING SCALE	ISSUE DATE
1:2.5 @ A4	12/02/2024
DRAWING NUMBER	**VERSION**
JSC 20CF BC70	2.4

LEGEND:

- (BW) BUILDING WRAP: Flexible Wall Underlay, As per NZBC E2/AS1 - Table 23, In extra high wind zones, Rigid Underlay required (9.1.7.2 E2/AS1)
- (CB1) CAVITY BATTEN - NON STRUCTURAL : Vertically installed JSC-U 45mm x 20mm Radiata Pine H3.2 treated, both face castellated and 18° bevelled edges. Site machined to allow for flashing.
- (CC) CAVITY CLOSURE: Cavity closure strip, positioned to give a 15mm Min drip edge to cladding
- (CF) CAP FLASHING: Continuous parapet flashing. Materials as per E2/AS1 4.3 + Figure 9 & Table 7
- (FT) FLASHING TAPE: As per E2/AS1 4.3.11
- (IL) INTERNAL LINING: Selected Internal Lining
- (IN) INSULATION: Selected Insulation
- (PSF) PARAPET SADDLE FLASHING: Materials as per E2/AS1 4.0, refer E2/AS1 Figure 11 & 12 . Typically 0.45mm Min 316 Stainless Steel. Refer Table 20 & Table 21 for Comparability of Materials in Contact
- (PB) PLYWOOD BACKING: 17mm CCA treated H3.2 grade plywood substrate
- (RM) ROOFING MEMBRANE: Selected System on 17mm CCA treated H3.2 grade plywood glued and screwed to Rafters. Roof Membrane requires 400mm solid block support each way & solid support to all sheet edges
- (TF) TIMBER FRAME: H1.2 min treated timber framing
- (WB) WEATHERBOARD: Selected JSC Bevel Back Weatherboard

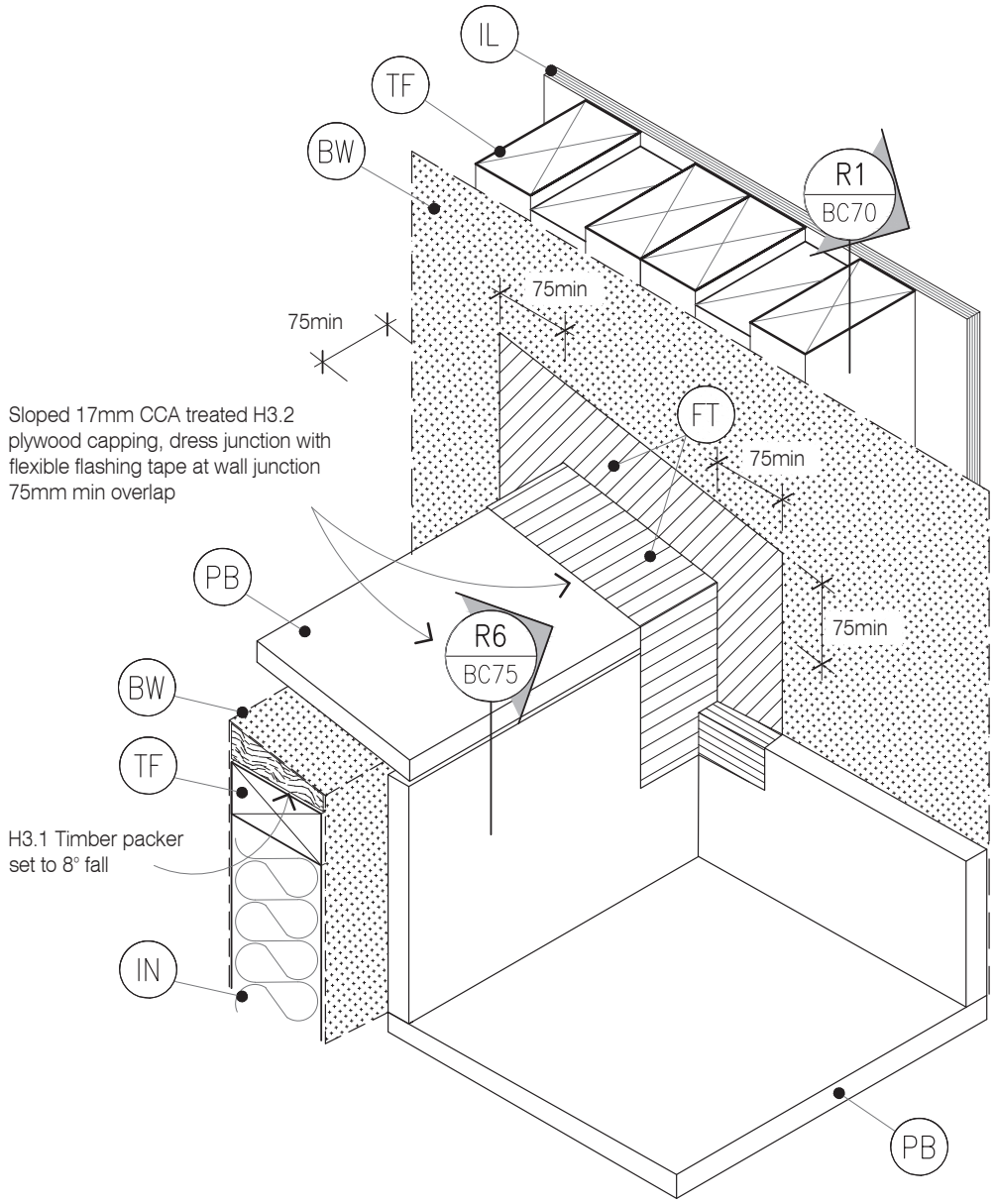

STAGE ONE

JSC PREMIUM ARCHITECTURAL & BUILDING SOLUTIONS

TYPE
BEVEL BACK WB - 20MM CAVITY FIX

NAME
Parapet Saddle Flashing - STAGE ONE

- TO BE READ IN CONJUNCTION WITH COMPLETE JSC BEVELCLAD SYSTEM LITERATURE
- DETAILS MAY BE SUBJECT CHANGE WITHOUT NOTICE

CodeMark CMNZ30082

DRAWING SCALE	ISSUE DATE
1:2.5 @ A4	12/02/2024
DRAWING NUMBER	**VERSION**
JSC 20CF BC71	2.4

LEGEND:

- (BW) BUILDING WRAP: Flexible Wall Underlay, As per NZBC E2/AS1 - Table 23, In extra high wind zones, Rigid Underlay required (9.1.7.2 E2/AS1)
- (CB1) CAVITY BATTEN - NON STRUCTURAL : Vertically installed JSC-U 45mm x 20mm Radiata Pine H3.2 treated, both face castellated and 18° bevelled edges. Site machined to allow for flashing.
- (CC) CAVITY CLOSURE: Cavity closure strip, positioned to give a 15mm Min drip edge to cladding
- (CF) CAP FLASHING: Continuous parapet flashing. Materials as per E2/AS1 4.3 + Figure 9 & Table 7
- (FT) FLASHING TAPE: As per E2/AS1 4.3.11
- (IL) INTERNAL LINING: Selected Internal Lining
- (IN) INSULATION: Selected Insulation
- (PSF) PARAPET SADDLE FLASHING: Materials as per E2/AS1 4.0, refer E2/AS1 Figure 11 & 12 . Typically 0.45mm Min 316 Stainless Steel. Refer Table 20 & Table 21 for Comparability of Materials in Contact
- (PB) PLYWOOD BACKING: 17mm CCA treated H3.2 grade plywood substrate
- (RM) ROOFING MEMBRANE: Selected System on 17mm CCA treated H3.2 grade plywood glued and screwed to Rafters. Roof Membrane requires 400mm solid block support each way & solid support to all sheet edges
- (TF) TIMBER FRAME: H1.2 min treated timber framing
- (WB) WEATHERBOARD: Selected JSC Bevel Back Weatherboard

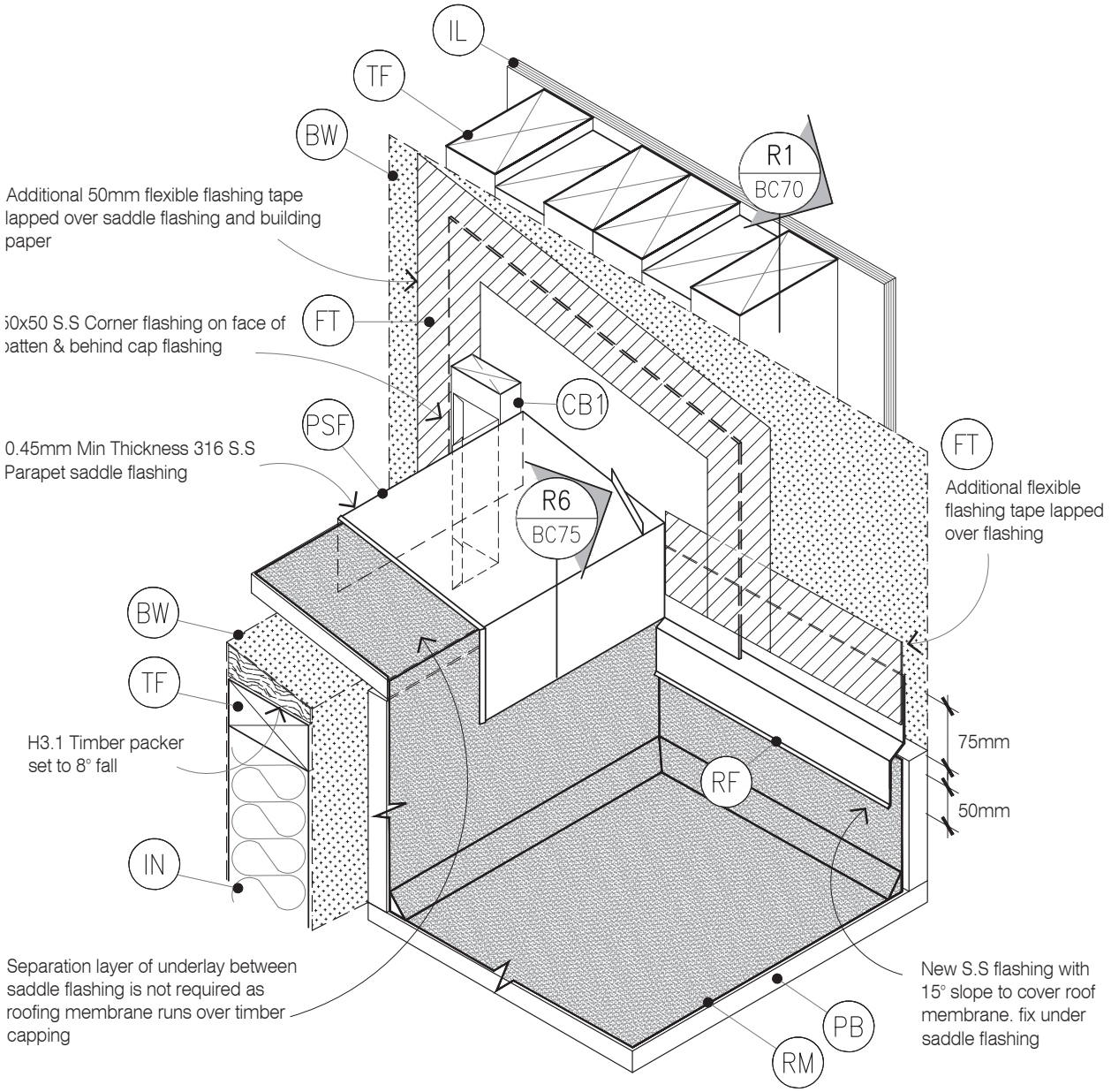

STAGE TWO

JSC PREMIUM ARCHITECTURAL & BUILDING SOLUTIONS

TYPE
BEVEL BACK WB - 20MM CAVITY FIX

NAME
Parapet Saddle Flashing - STAGE TWO

- TO BE READ IN CONJUNCTION WITH COMPLETE JSC BEVELCLAD SYSTEM LITERATURE
- DETAILS MAY BE SUBJECT CHANGE WITHOUT NOTICE

CodeMark CMNZ30082

DRAWING SCALE	ISSUE DATE
1:5 @ A4	12/02/2024
DRAWING NUMBER	**VERSION**
JSC 20CF BC72	2.4

LEGEND:

- (BW) BUILDING WRAP: Flexible Wall Underlay, As per NZBC E2/AS1 - Table 23, In extra high wind zones, Rigid Underlay required (9.1.7.2 E2/AS1)
- (CB1) CAVITY BATTEN - NON STRUCTURAL : Vertically installed JSC-U 45mm x 20mm Radiata Pine H3.2 treated, both face castellated and 18° bevelled edges. Site machined to allow for flashing.
- (CC) CAVITY CLOSURE: Cavity closure strip, positioned to give a 15mm Min drip edge to cladding
- (CF) CAP FLASHING: Continuous parapet flashing. Materials as per E2/AS1 4.3 + Figure 9 & Table 7
- (FT) FLASHING TAPE: As per E2/AS1 4.3.11
- (IL) INTERNAL LINING: Selected Internal Lining
- (IN) INSULATION: Selected Insulation
- (PSF) PARAPET SADDLE FLASHING: Materials as per E2/AS1 4.0, refer E2/AS1 Figure 11 & 12 . Typically 0.45mm Min 316 Stainless Steel. Refer Table 20 & Table 21 for Comparability of Materials in Contact
- (PB) PLYWOOD BACKING: 17mm CCA treated H3.2 grade plywood substrate
- (RM) ROOFING MEMBRANE: Selected System on 17mm CCA treated H3.2 grade plywood glued and screwed to Rafters. Roof Membrane requires 400mm solid block support each way & solid support to all sheet edges
- (TF) TIMBER FRAME: H1.2 min treated timber framing
- (WB) WEATHERBOARD: Selected JSC Bevel Back Weatherboard

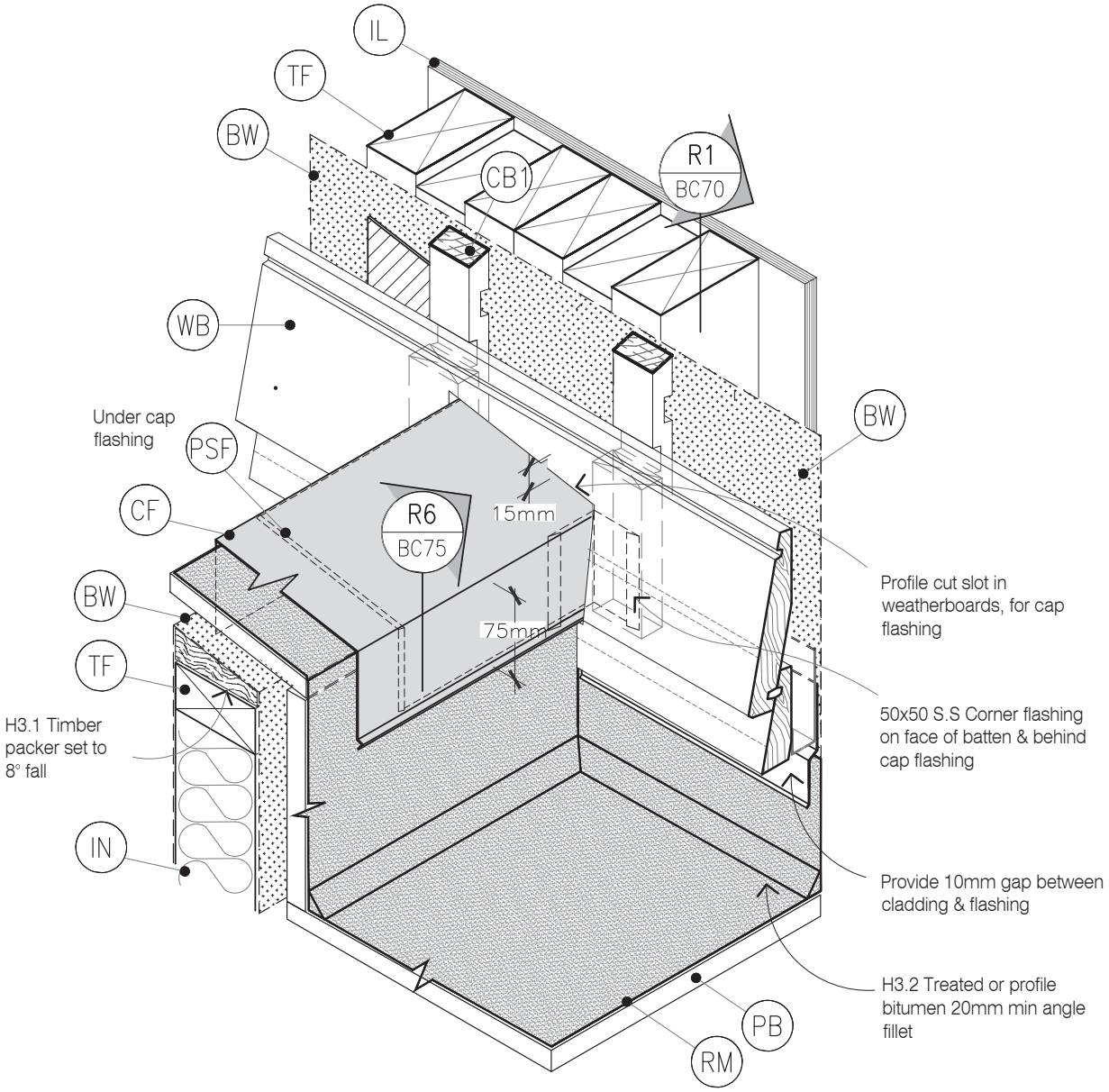

STAGE THREE

JSC PREMIUM ARCHITECTURAL & BUILDING SOLUTIONS

TYPE
BEVEL BACK WB - 20MM CAVITY FIX

NAME
Parapet Saddle Flashing - STAGE THREE

- TO BE READ IN CONJUNCTION WITH COMPLETE JSC BEVELCLAD SYSTEM LITERATURE
- DETAILS MAY BE SUBJECT CHANGE WITHOUT NOTICE

CodeMark CMNZ30082

DRAWING SCALE	ISSUE DATE
1:2.5 @ A4	12/02/2024
DRAWING NUMBER	**VERSION**
JSC 20CF BC73	2.4

LEGEND:

- (BW) BUILDING WRAP: Flexible Wall Underlay, As per NZBC E2/AS1 - Table 23, In extra high wind zones, Rigid Underlay required (9.1.7.2 E2/AS1)
- (CB1) CAVITY BATTEN - NON STRUCTURAL : Vertically installed JSC-U 45mm x 20mm Radiata Pine H3.2 treated, both face castellated and 18° bevelled edges. Site machined to allow for flashing.
- (CC) CAVITY CLOSURE: Cavity closure strip, positioned to give a 15mm Min drip edge to cladding
- (CF) CAP FLASHING: Continuous parapet flashing. Materials as per E2/AS1 4.3 + Figure 9 & Table 7
- (FT) FLASHING TAPE: As per E2/AS1 4.3.11
- (IL) INTERNAL LINING: Selected Internal Lining
- (IN) INSULATION: Selected Insulation
- (PSF) PARAPET SADDLE FLASHING: Materials as per E2/AS1 4.0, refer E2/AS1 Figure 11 & 12 . Typically 0.45mm Min 316 Stainless Steel. Refer Table 20 & Table 21 for Comparability of Materials in Contact
- (PB) PLYWOOD BACKING: 17mm CCA treated H3.2 grade plywood substrate
- (RM) ROOFING MEMBRANE: Selected System on 17mm CCA treated H3.2 grade plywood glued and screwed to Rafters. Roof Membrane requires 400mm solid block support each way & solid support to all sheet edges
- (TF) TIMBER FRAME: H1.2 min treated timber framing
- (WB) WEATHERBOARD: Selected JSC Bevel Back Weatherboard

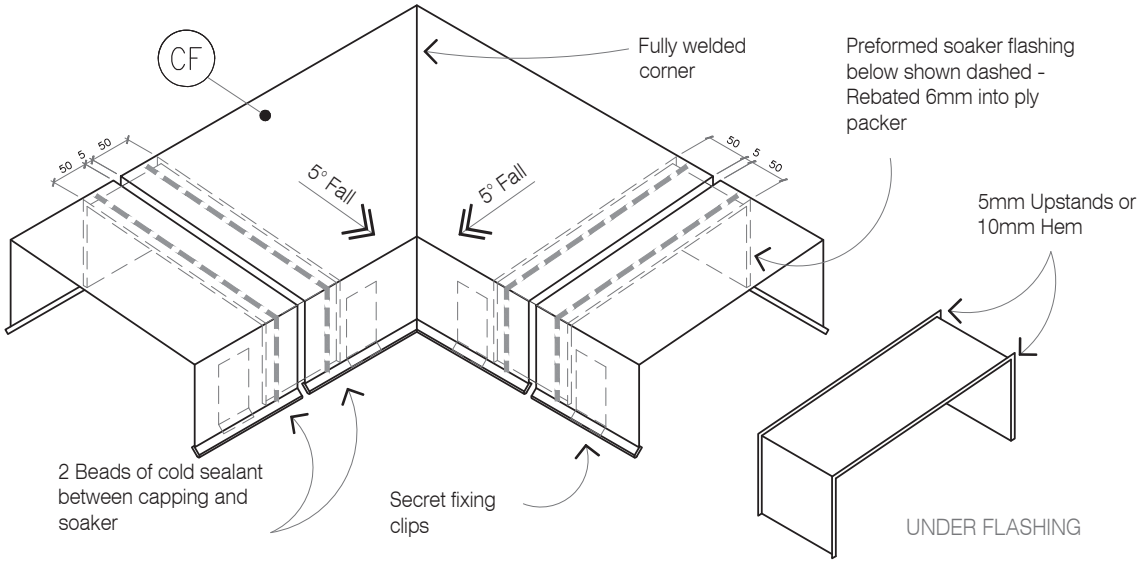

PARAPET CORNER FLASHING

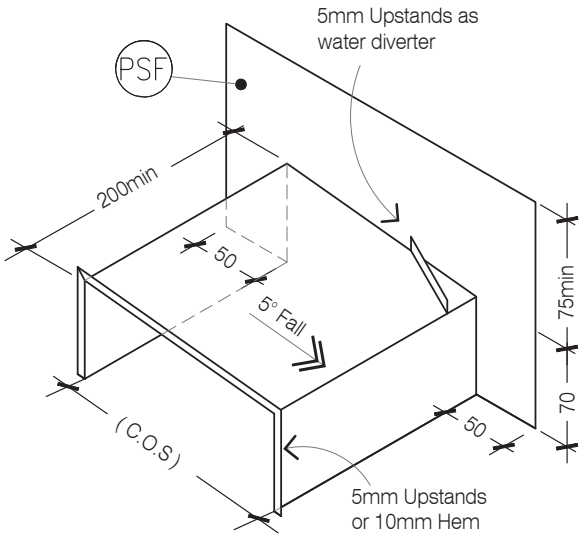

SADDLE FLASHING

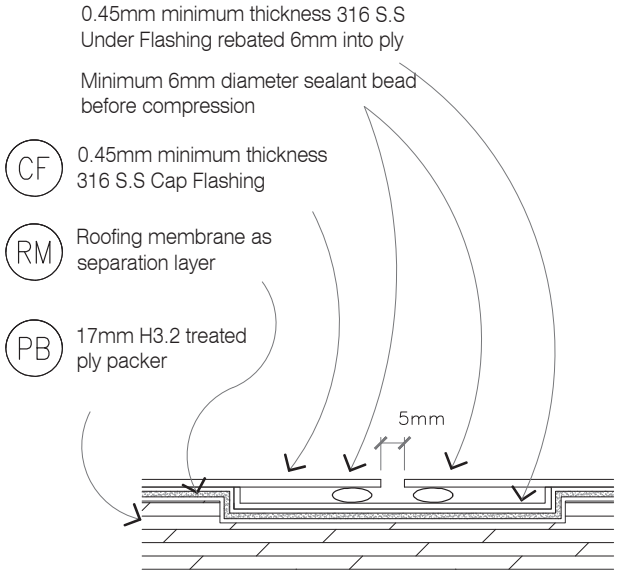

SECTION THROUGH SOAKER FLASHING

JSC PREMIUM ARCHITECTURAL & BUILDING SOLUTIONS

TYPE
BEVEL BACK WB - 20MM CAVITY FIX

NAME
Typical Parapet - Capping Joint Details

- TO BE READ IN CONJUNCTION WITH COMPLETE JSC BEVELCLAD SYSTEM LITERATURE
- DETAILS MAY BE SUBJECT CHANGE WITHOUT NOTICE

CodeMark CMNZ30082

DRAWING SCALE	ISSUE DATE
1:2.5 @ A4	12/02/2024
DRAWING NUMBER	**VERSION**
JSC 20CF BC74	2.4

LEGEND:

- (BW) BUILDING WRAP: Flexible Wall Underlay, As per NZBC E2/AS1 - Table 23, In extra high wind zones, Rigid Underlay required (9.1.7.2 E2/AS1)
- (CB1) CAVITY BATTEN - NON STRUCTURAL : Vertically installed JSC-U 45mm x 20mm Radiata Pine H3.2 treated, both face castellated and 18° bevelled edges. Site machined to allow for flashing.
- (CC) CAVITY CLOSURE: Cavity closure strip, positioned to give a 15mm Min drip edge to cladding
- (CF) CAP FLASHING: Continuous parapet flashing. Materials as per E2/AS1 4.3 + Figure 9 & Table 7
- (FT) FLASHING TAPE: As per E2/AS1 4.3.11
- (IL) INTERNAL LINING: Selected Internal Lining
- (IN) INSULATION: Selected Insulation
- (PSF) PARAPET SADDLE FLASHING: Materials as per E2/AS1 4.0, refer E2/AS1 Figure 11 & 12 . Typically 0.45mm Min 316 Stainless Steel. Refer Table 20 & Table 21 for Comparability of Materials in Contact
- (PB) PLYWOOD BACKING: 17mm CCA treated H3.2 grade plywood substrate
- (RM) ROOFING MEMBRANE: Selected System on 17mm CCA treated H3.2 grade plywood glued and screwed to Rafters. Roof Membrane requires 400mm solid block support each way & solid support to all sheet edges
- (TF) TIMBER FRAME: H1.2 min treated timber framing
- (WB) WEATHERBOARD: Selected JSC Bevel Back Weatherboard

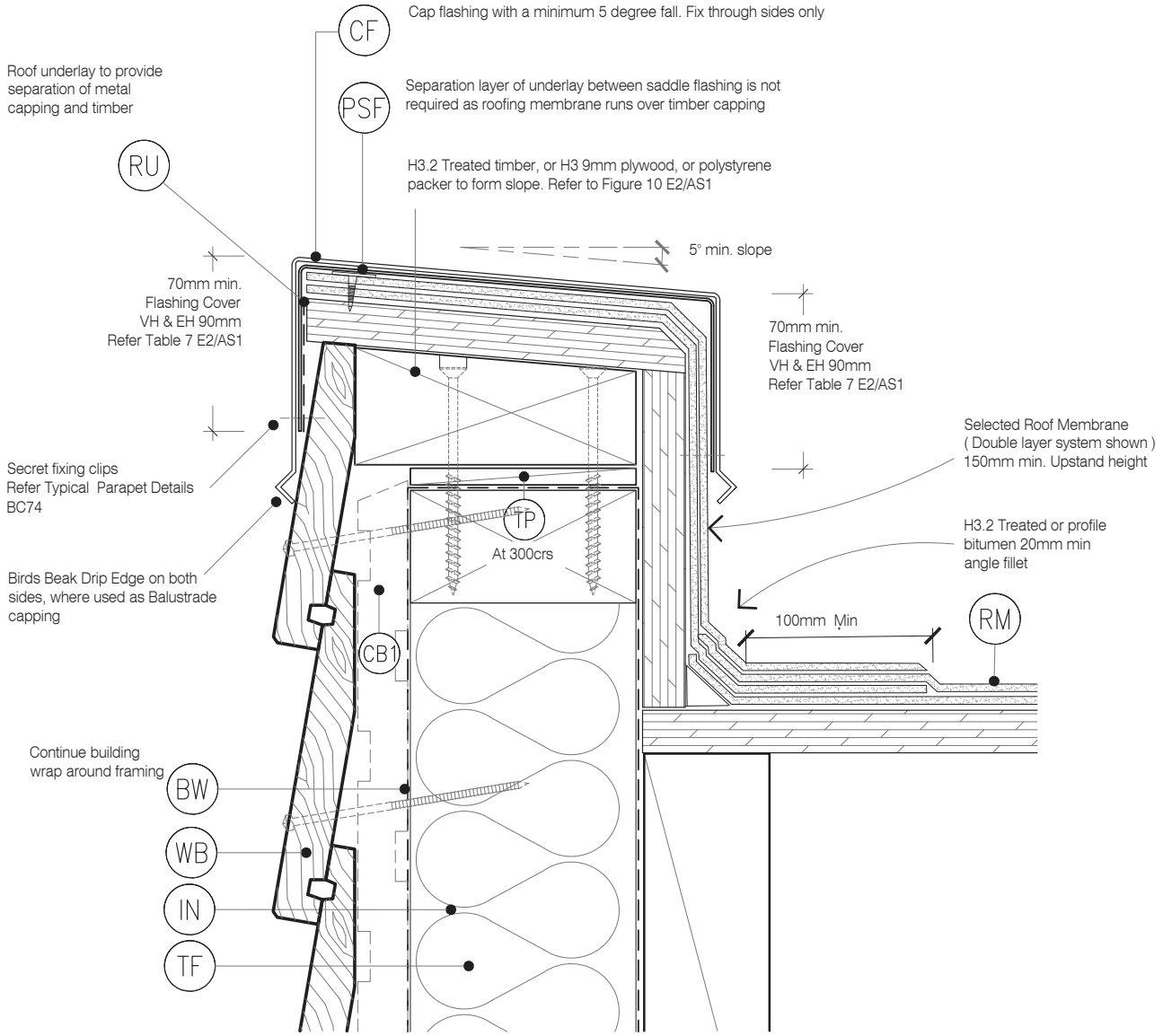

JSC PREMIUM ARCHITECTURAL & BUILDING SOLUTIONS

TYPE
BEVEL BACK WB - 20MM CAVITY FIX

NAME
Parapet Section to Membrane Roof

- TO BE READ IN CONJUNCTION WITH COMPLETE JSC BEVELCLAD SYSTEM LITERATURE
- DETAILS MAY BE SUBJECT CHANGE WITHOUT NOTICE

CodeMark CMNZ30082

DRAWING SCALE	ISSUE DATE
1:2.5 @ A4	12/02/2024
DRAWING NUMBER	**VERSION**
JSC 20CF BC75	2.4

LEGEND:

- (AF) APRON FLASHING: Materials as per E2/AS1 4.0, Coating to match roofing material or refer E2/AS1 Table 21. Flashing Cover 130mm min. (L,M & H ≥ 10°) All others 200mm Refer Table 7 E2/AS1
- (BW) BUILDING WRAP: Flexible Wall Underlay, As per NZBC E2/AS1 - Table 23, In extra high wind zones, Ridgid Underlay required (9.1.7.2 E2/AS1)
- (CB1) CAVITY BATTEN - NON STRUCTURAL : Horizontally installed JSC-U 45mm x 20mm Radiata Pine H3.2 treated, both face castellated and 18° bevelled edges.
- (CC) CAVITY CLOSURE: Cavity closure strip, positioned to give a 15mm Min drip edge to cladding
- (IL) INTERNAL LINING: Selected Internal Lining
- (IN) INSULATION: Selected Insulation
- (HS) HEAD SOFFIT SCRIBER: JSC 27 mm x 40 mm Fix with 75 x 3.15mm 316 S.S nail in 2.5mm predrilled hole
- (MR) METAL ROOFING : Selected Metal Roofing
- (SL) SOFFIT LINING: JSC Soffit Lining
- (TF) TIMBER FRAME: H1.2 min treated timber framing
- (TP) TIMBER PACKER: H3.2 at 300crs to allow ventilation over the top of the wall.
- (RU) ROOFING UNDERLAY: Selected Roofing Underlay As Per AS/AZS4200 with Mesh or Self Supported
- (WB) WEATHERBOARD: Selected JSC Bevel Back Weatherboard

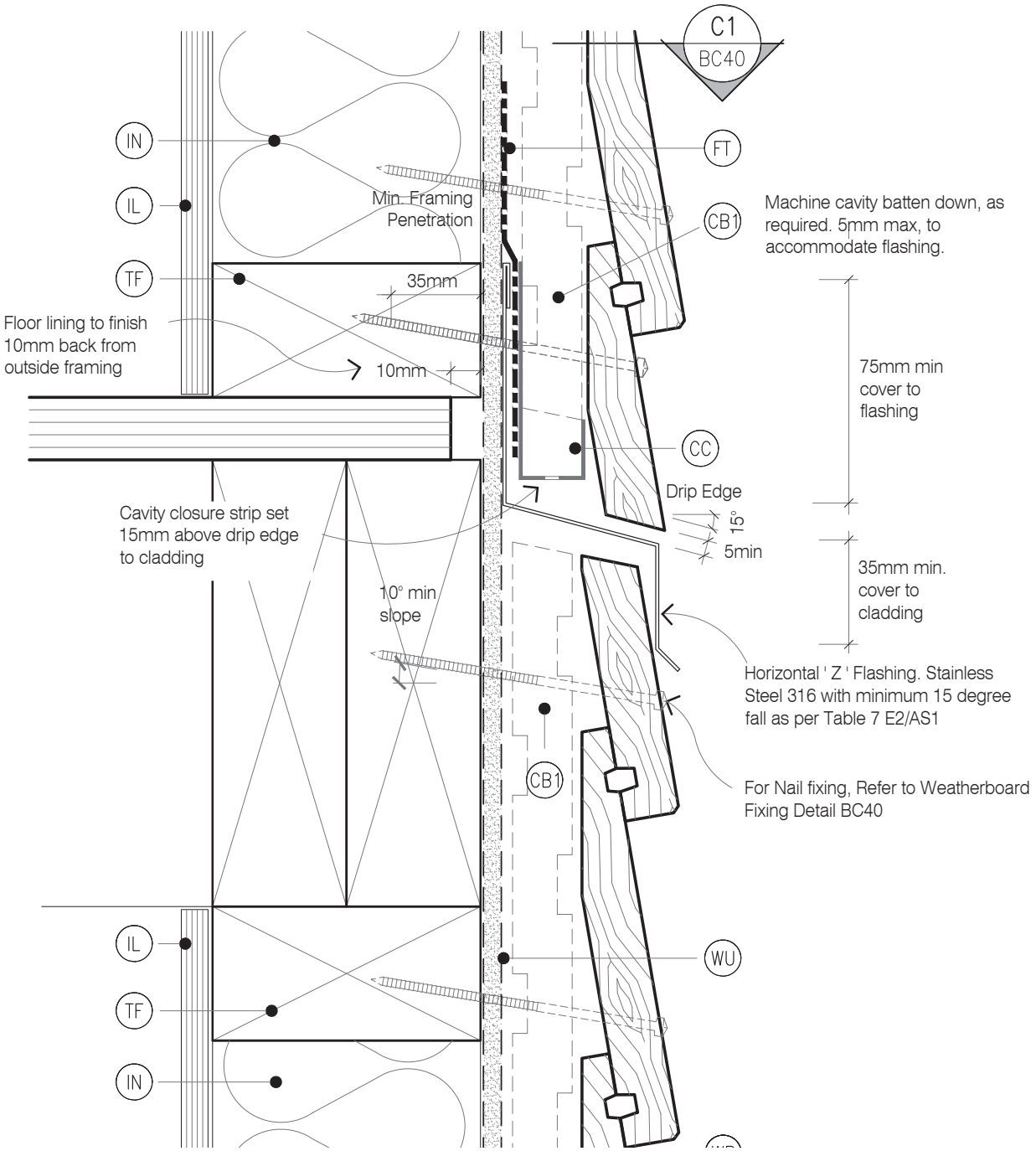

JSC PREMIUM ARCHITECTURAL & BUILDING SOLUTIONS

TYPE
BEVEL BACK WB - 20MM CAVITY FIX

NAME
Drained Inter Storey Joint

- TO BE READ IN CONJUNCTION WITH COMPLETE JSC BEVELCLAD SYSTEM LITERATURE
- DETAILS MAY BE SUBJECT CHANGE WITHOUT NOTICE

CodeMark CMNZ30082

DRAWING SCALE	ISSUE DATE
1:2 @ A4	12/02/2024
DRAWING NUMBER	VERSION
JSC 20CF BC80	2.4

LEGEND:

- (AF) APRON FLASHING: Materials as per E2/AS1 4.0, Coating to match roofing material or refer E2/AS1 Table 21. Flashing Cover 130mm min. (L,M & H ≥ 10°) All others 200mm Refer Table 7 E2/AS1
- (BW) BUILDING WRAP: Flexible Wall Underlay, As per NZBC E2/AS1 - Table 23, In extra high wind zones, Ridgid Underlay required (9.1.7.2 E2/AS1)
- (CB1) CAVITY BATTEN - NON STRUCTURAL : Horizontally installed JSC-U 45mm x 20mm Radiata Pine H3.2 treated, both face castellated and 18° bevelled edges.
- (CC) CAVITY CLOSURE: Cavity closure strip, positioned to give a 15mm Min drip edge to cladding
- (IL) INTERNAL LINING: Selected Internal Lining
- (IN) INSULATION: Selected Insulation
- (HS) HEAD SOFFIT SCRIBER: JSC 27 mm x 40 mm Fix with 75 x 3.15mm 316 S.S nail in 2.5mm predrilled hole
- (MR) METAL ROOFING : Selected Metal Roofing
- (SL) SOFFIT LINING: JSC Soffit Lining
- (TF) TIMBER FRAME: H1.2 min treated timber framing
- (TP) TIMBER PACKER: H3.2 at 300crs to allow ventilation over the top of the wall.
- (RU) ROOFING UNDERLAY: Selected Roofing Underlay As Per AS/AZS4200 with Mesh or Self Supported
- (WB) WEATHERBOARD: Selected JSC Bevel Back Weatherboard

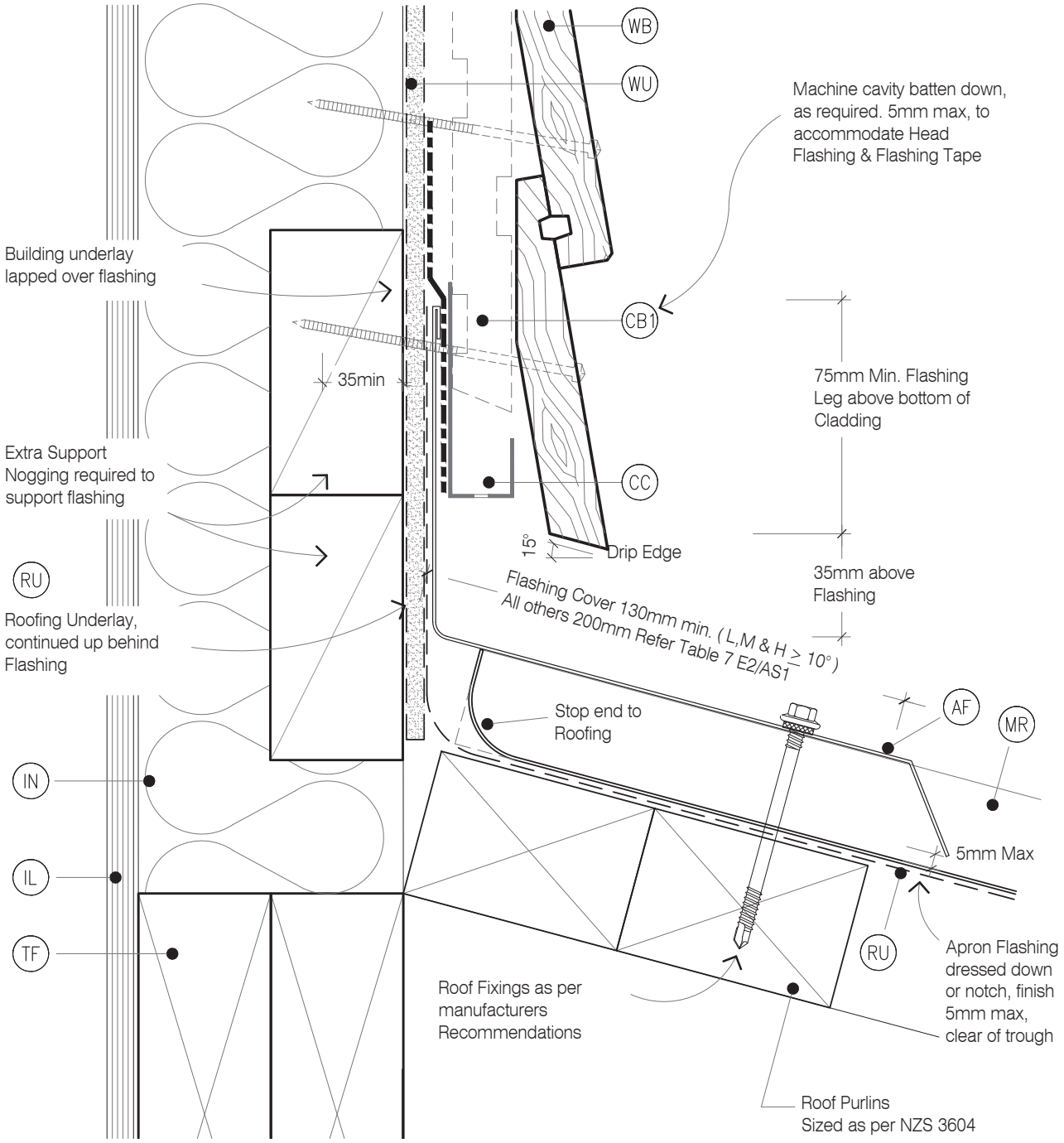

JSC PREMIUM ARCHITECTURAL & BUILDING SOLUTIONS

TYPE
BEVEL BACK WB - 20MM CAVITY FIX

NAME
Apron Flashing Roof To Wall Junction

- TO BE READ IN CONJUNCTION WITH COMPLETE JSC BEVELCLAD SYSTEM LITERATURE
- DETAILS MAY BE SUBJECT CHANGE WITHOUT NOTICE

CodeMark CMNZ30082

DRAWING SCALE	ISSUE DATE
1:2 @ A4	12/02/2024
DRAWING NUMBER	VERSION
JSC 20CF BC81	2.4

LEGEND:

- (AF) APRON FLASHING: Materials as per E2/AS1 4.0, Coating to match roofing material or refer E2/AS1 Table 21. Flashing Cover 130mm min. (L,M & H ≥ 10°) All others 200mm Refer Table 7 E2/AS1
- (BW) BUILDING WRAP: Flexible Wall Underlay, As per NZBC E2/AS1 - Table 23, In extra high wind zones, Ridgid Underlay required (9.1.7.2 E2/AS1)
- (CB1) CAVITY BATTEN - NON STRUCTURAL : Horizontally installed JSC-U 45mm x 20mm Radiata Pine H3.2 treated, both face castellated and 18° bevelled edges.
- (CC) CAVITY CLOSURE: Cavity closure strip, positioned to give a 15mm Min drip edge to cladding
- (IL) INTERNAL LINING: Selected Internal Lining
- (IN) INSULATION: Selected Insulation
- (HS) HEAD SOFFIT SCRIBER: JSC 27 mm x 40 mm Fix with 75 x 3.15mm 316 S.S nail in 2.5mm predrilled hole
- (MR) METAL ROOFING : Selected Metal Roofing
- (SL) SOFFIT LINING: JSC Soffit Lining
- (TF) TIMBER FRAME: H1.2 min treated timber framing
- (TP) TIMBER PACKER: H3.2 at 300crs to allow ventilation over the top of the wall.
- (RU) ROOFING UNDERLAY: Selected Roofing Underlay As Per AS/AZS4200 with Mesh or Self Supported
- (WB) WEATHERBOARD: Selected JSC Bevel Back Weatherboard

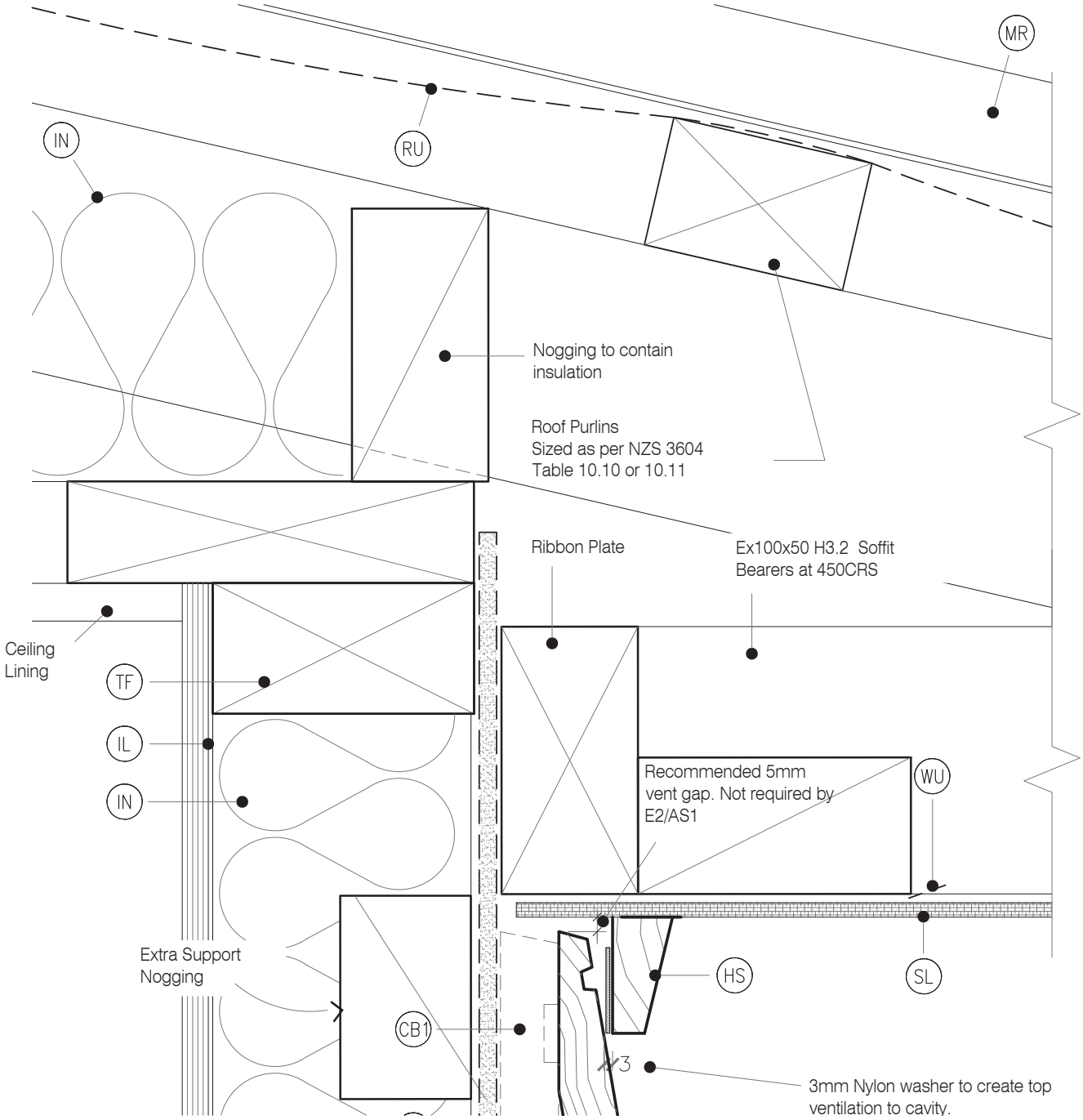

JSC PREMIUM ARCHITECTURAL & BUILDING SOLUTIONS

TYPE
BEVEL BACK WB - 20MM CAVITY FIX

NAME
Soffit Detail at Wall

- TO BE READ IN CONJUNCTION WITH COMPLETE JSC BEVELCLAD SYSTEM LITERATURE
- DETAILS MAY BE SUBJECT CHANGE WITHOUT NOTICE

CodeMark CMNZ30082

DRAWING SCALE	ISSUE DATE
1:2 @ A4	12/02/2024
DRAWING NUMBER	**VERSION**
JSC 20CF BC82	2.4

LEGEND:

- (AF) APRON FLASHING: Materials as per E2/AS1 4.0, Coating to match roofing material or refer E2/AS1 Table 21. Flashing Cover 130mm min. (L,M & H ≥ 10°) All others 200mm Refer Table 7 E2/AS1
- (BW) BUILDING WRAP: Flexible Wall Underlay, As per NZBC E2/AS1 - Table 23, In extra high wind zones, Ridgid Underlay required (9.1.7.2 E2/AS1)
- (CB1) CAVITY BATTEN - NON STRUCTURAL : Horizontally installed JSC-U 45mm x 20mm Radiata Pine H3.2 treated, both face castellated and 18° bevelled edges.
- (CC) CAVITY CLOSURE: Cavity closure strip, positioned to give a 15mm Min drip edge to cladding
- (IL) INTERNAL LINING: Selected Internal Lining
- (IN) INSULATION: Selected Insulation
- (HS) HEAD SOFFIT SCRIBER: JSC 27 mm x 40 mm Fix with 75 x 3.15mm 316 S.S nail in 2.5mm predrilled hole
- (MR) METAL ROOFING : Selected Metal Roofing
- (SL) SOFFIT LINING: JSC Soffit Lining
- (TF) TIMBER FRAME: H1.2 min treated timber framing
- (TP) TIMBER PACKER: H3.2 at 300crs to allow ventilation over the top of the wall.
- (RU) ROOFING UNDERLAY: Selected Roofing Underlay As Per AS/AZS4200 with Mesh or Self Supported
- (WB) WEATHERBOARD: Selected JSC Bevel Back Weatherboard

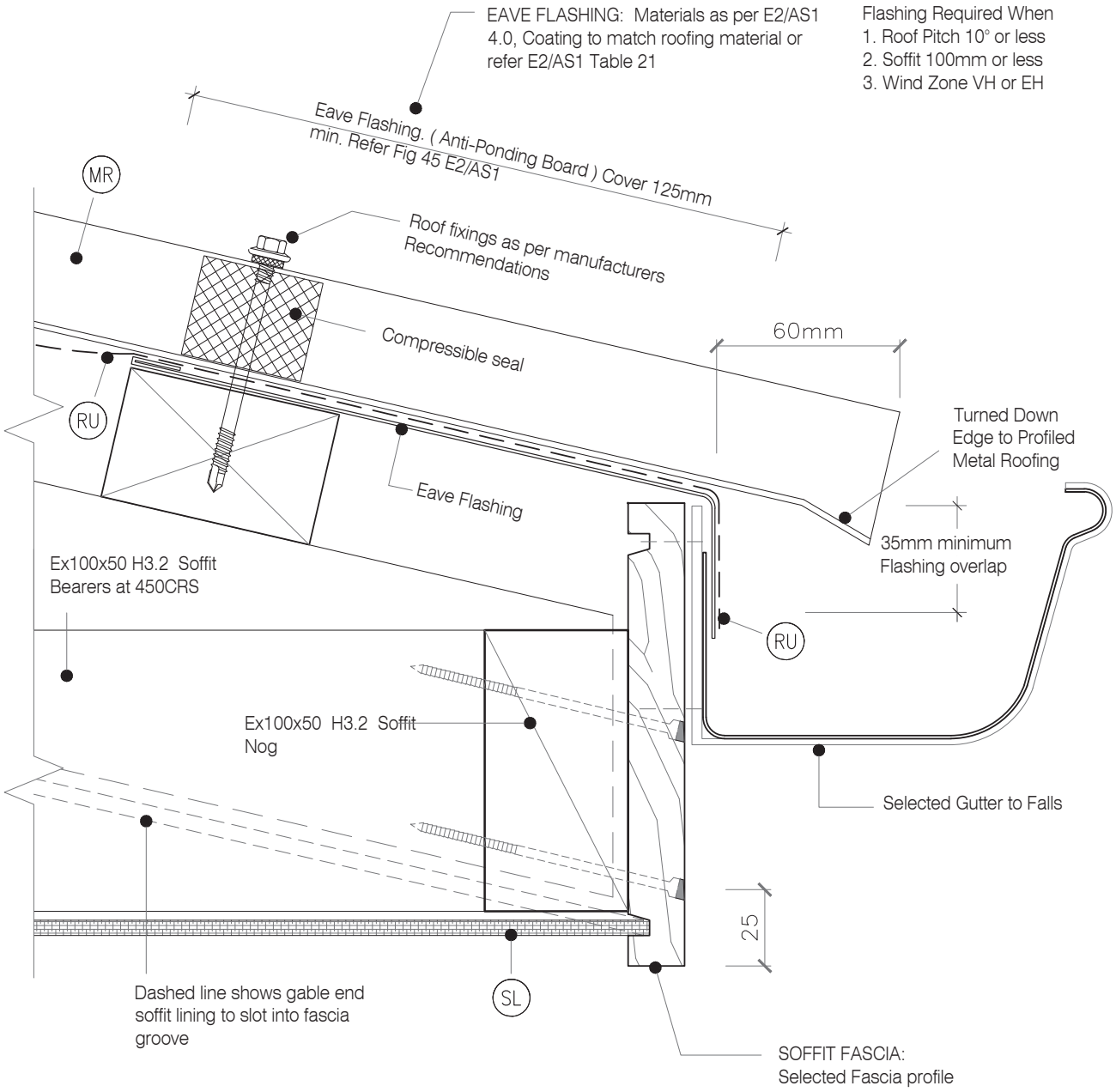

JSC PREMIUM ARCHITECTURAL & BUILDING SOLUTIONS

TYPE
BEVEL BACK WB - 20MM CAVITY FIX

NAME
Soffit Detail at Fascia

- TO BE READ IN CONJUNCTION WITH COMPLETE JSC BEVELCLAD SYSTEM LITERATURE
- DETAILS MAY BE SUBJECT CHANGE WITHOUT NOTICE

CodeMark CMNZ30082

DRAWING SCALE	ISSUE DATE
1:2 @ A4	12/02/2024
DRAWING NUMBER	**VERSION**
JSC 20CF BC83	2.4

LEGEND:

- (AF) APRON FLASHING: Materials as per E2/AS1 4.0, Coating to match roofing material or refer E2/AS1 Table 21. Flashing Cover 130mm min. (L,M & H ≥ 10°) All others 200mm Refer Table 7 E2/AS1
- (BW) BUILDING WRAP: Flexible Wall Underlay, As per NZBC E2/AS1 - Table 23, In extra high wind zones, Ridgid Underlay required (9.1.7.2 E2/AS1)
- (CB1) CAVITY BATTEN - NON STRUCTURAL : Horizontally installed JSC-U 45mm x 20mm Radiata Pine H3.2 treated, both face castellated and 18° bevelled edges.
- (CC) CAVITY CLOSURE: Cavity closure strip, positioned to give a 15mm Min drip edge to cladding
- (IL) INTERNAL LINING: Selected Internal Lining
- (IN) INSULATION: Selected Insulation
- (HS) HEAD SOFFIT SCRIBER: JSC 27 mm x 40 mm Fix with 75 x 3.15mm 316 S.S nail in 2.5mm predrilled hole
- (MR) METAL ROOFING : Selected Metal Roofing
- (SL) SOFFIT LINING: JSC Soffit Lining
- (TF) TIMBER FRAME: H1.2 min treated timber framing
- (TP) TIMBER PACKER: H3.2 at 300crs to allow ventilation over the top of the wall.
- (RU) ROOFING UNDERLAY: Selected Roofing Underlay As Per AS/AZS4200 with Mesh or Self Supported
- (WB) WEATHERBOARD: Selected JSC Bevel Back Weatherboard

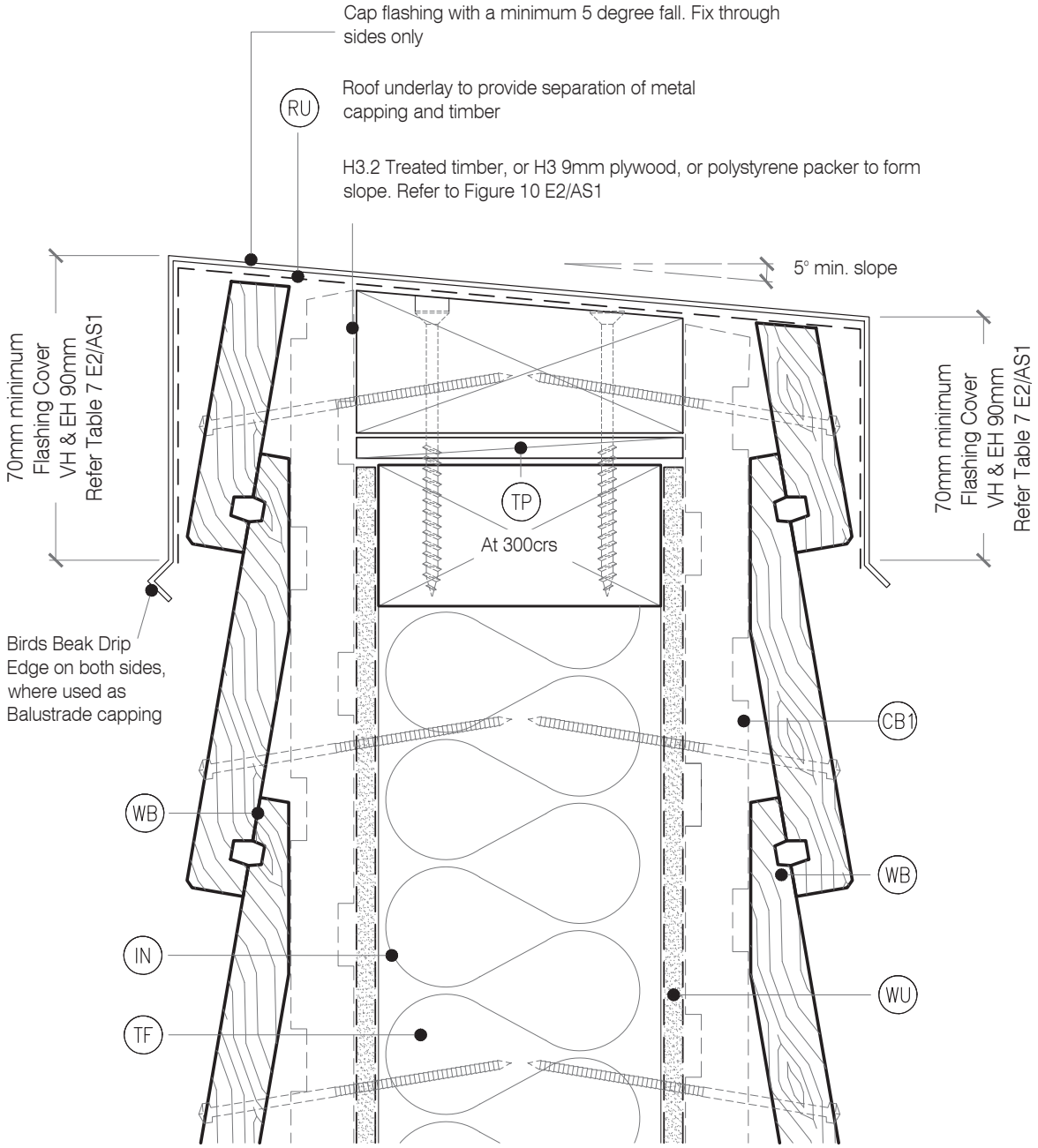

JSC PREMIUM ARCHITECTURAL & BUILDING SOLUTIONS

TYPE
BEVEL BACK WB- 20MM CAVITY FIX

NAME
Parapet Detail

- TO BE READ IN CONJUNCTION WITH COMPLETE JSC BEVELCLAD SYSTEM LITERATURE
- DETAILS MAY BE SUBJECT CHANGE WITHOUT NOTICE

CodeMark CMNZ30082

DRAWING SCALE	ISSUE DATE
1:2 @ A4	12/02/2024
DRAWING NUMBER	**VERSION**
JSC 20CF BC84	2.4