ARCHITECTURAL DRAWINGS

ISSUE : 12/02/2024 | VERSION : 2.4

JSC VERTICLAD Vertical Shiplap Weatherboards

- Flexible Underlay 20mm Cavity Fix

GENERAL NOTES

OVERVIEW :

JSC VertiClad is a cavity based external wall cladding system comprising of:

- Timber weatherboards finished with high quality exterior grade coatings
- H3.2 treated timber castellated cavity battens
- Fascia boards and moulding profiles

This documentation covers the fixing instructions for the installation of JSC vertical shiplap weatherboards over JSC-U 20mm thick castellated cavity battens.

The information in this document has been specifically grouped in 2 different layouts to help Architects, Designers & Builders on site.

1. **A3/A1 ARCHITECTURAL DRAWINGS:**
   Similar details are grouped in A1/A3 format that make it easier to import into the project plan.
2. **A4 SITE DRAWINGS**
   Same information is made available on a A4 page at a larger scale for builders making it easier to read and distribute the drawings on site.

SCOPE OF USE

- This document is for use exclusively within the scope of JSC VertiClad Vertical Shiplap Weatherboard Cladding System technical documentation and Code Compliance CodeMark certificate CMNZ30084.
- Details are subject to change without notification and only the current version is compliant.
- Refer to www.jsc.co.nz at the time of use for the current documentation.
- The designer/specifier must be satisfied that these details are applicable for their intended use.

FIXING SPECIFICATION

SPECIES	FIXINGS MATERIAL
Western Red Cedar	316 Stainless Steel or Silicon Bronze annular grooved nails
Alaskan Yellow Cedar	316 Stainless Steel or Silicon Bronze annular grooved nails
Iroko	316 Stainless Steel or Silicon Bronze annular grooved nails
Radiata Pine / Nordic Pine	316 Stainless Steel or Silicon Bronze annular grooved nails
JSC-TMT® Thermally Modified Timber	
TMT TAIGA (RW/WW)	316 Stainless Steel annular grooved nails
TMT TAXON	316 Stainless Steel annular grooved nails
TMT TUSCAN	316 Stainless Steel annular grooved nails
TMT AMBA	316 Stainless Steel annular grooved nails

A3/A1 ARCHITECTURAL DRAWINGS INDEX

PREMIUM ARCHITECTURAL & BUILDING SOLUTIONS

EMAIL: TECHHELP@JSCTIMBER.CO.NZ
WEBSITE: WWW.JSCTIMBER.CO.NZ
Phone: 09 412 2812 (Technical)

CodeMark CMNZ30084

TYPE
VERTICAL SHIPLAP WB - 20MM CAVITY FIX FLEXIBLE UNDERLAY

NAME
COVER SHEET VERTICAL SHIPLAP WB CLADDING

- TO BE READ IN CONJUNCTION WITH COMPLETE JSC SYSTEM LITERATURE
- DETAILS MAY BE SUBJECT CHANGE WITHOUT NOTICE

DRAWING SCALE	ISSUE DATE
NTS	12/02/2024
DRAWING NUMBER	**VERSION**
JSC 20CF VS00	2.4

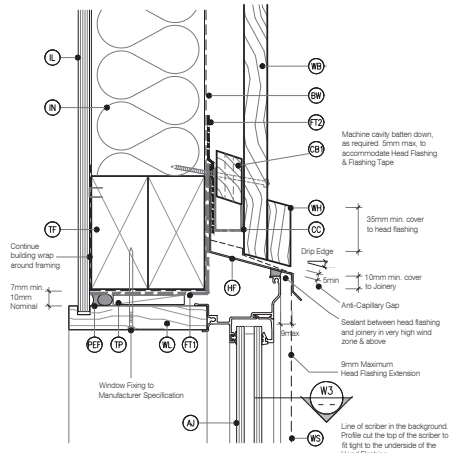

W1 / VS10 WINDOW HEAD - Vertical Shiplap WB

Cavity Fix - Aluminium Joinery - Double Glazing

SCALE 1:2 @ A1, 1:4 @ A3

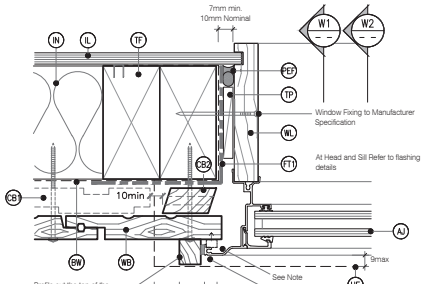

NOTE : No Scriber Option :
The Aluminium Joinery must sit hard against the back of the joinery flange and the timber weatherboards with a E.P.S Compressible bond breaker foam seal between.

W3 / VS12 WINDOW JAMB - Vertical Shiplap WB

Cavity Fix - Aluminium Joinery - Double Glazing

SCALE 1:2 @ A1, 1:4 @ A3

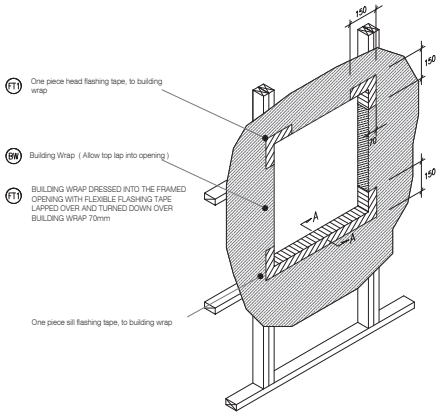

W4 / VS13 TYPICAL WINDOW OPENING (FLASHING TAPE)

SCALE : N.T.S

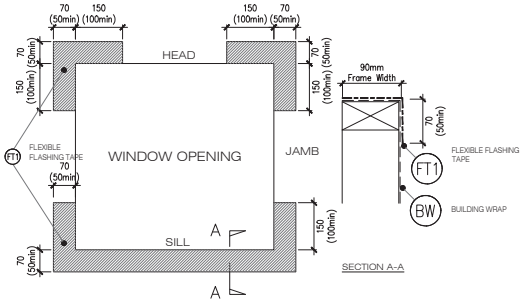

W5 / VS13 FLEXIBLE BUILDING WRAP AT OPENING

SCALE : 1 / 5 @ A1, 1 / 10 @ A3

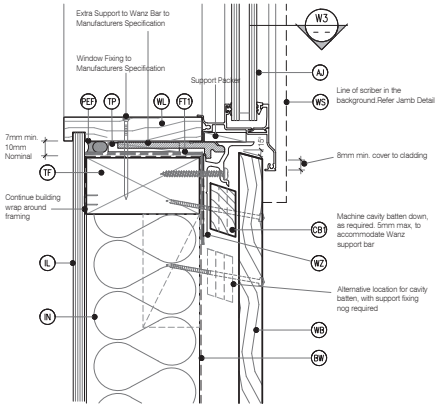

W2 / VS11 WINDOW SILL - Vertical Shiplap WB

Cavity Fix - Aluminium Joinery - Double Glazing

SCALE 1:2 @ A1, 1:4 @ A3

LEGEND:

- AJ — ALUMINIUM JOINERY: Selected double glazed aluminium joinery. To E2/AS1 9.1.10
- BW — BUILDING WRAP: Flexible Wall Underlay, As per NZBC E2/AS1 - Table 23, In extra high wind zones, Rigid Underlay required (9.1.7.2 E2/AS1)
- CB1 — CAVITY BATTEN - NON STRUCTURAL : Horizontally installed JSC-U 45mm x 20mm Radiata Pine H3.2 treated, both face castellated and 18° bevelled edges.
- CB2 — CAVITY BATTEN - NON STRUCTURAL : Vertically installed JSC-U 45mm x 20mm Radiata Pine H3.2 treated, both face castellated and 18° bevelled edges. Site machined to allow for flashing.
- CC — CAVITY CLOSURE: Cavity closure strip, positioned to give a 15mm min. drip edge to cladding
- FT1 — FLASHING TAPE: Flashing tape over wrap 70mm (50 min) turn-down required in corners only. Refer to Fig. 72 of NZBC E2/AS1
- FT2 — FLEXIBLE FLASHING TAPE: Flexible flashing tape lapped over aluminium head flashing or 2nd layer of Building Wrap, taped joint to top of timber frame
- HF — HEAD FLASHING: Aluminium head flashing with minimum 15 degree fall, optional hemmed edges as per table 7 E2/AS1
- IL — INTERNAL LINING: Selected Internal Lining
- IN — INSULATION: Selected Insulation
- PEF — PEF ROD BACKING: Foam backing rod with sealant to cavity in Window perimeter that forms a waterproof air-seal. (Sealant 2:1 Ratio)
- TF — TIMBER FRAME: H1.2 min treated timber framing
- TP — TIMBER PACKER: Tan H3.2 Treated Packer
- WB — WEATHER BOARD: Selected JSC Vertical Shiplap Weatherboard
- WL — WINDOW LINER: As Specified
- WB — WEATHER BOARD: JSC Vertical Shiplap Weatherboard
- WH — WEATHERHEAD: (OPTIONAL) Selected JSC Horizontal batten above meter box as necessary to suit profile, shaped to shed water, sealant to back of head scriber
- WS — WINDOW SCRIBER: Sealant to back of scriber and 75 x 3.15mm 316 Stainless Steel nail in 3mm predrilled hole.
- WZ — WANZ SUPPORT: Provide window support as required by joinery manufacturer

GENERAL NOTES:

1. JSC VertiClad System must be installed by a suitably qualified and experienced trade person. Where Restricted Building Work (RBW) applied the installer shall be a Licensed Building Practitioner (LBP) or supervised by LBP.
2. Weatherboards must be dry and free of any contamination.
3. Board lengths must be optimised prior to the installation to avoid any unnecessary wastage and joints.
4. Any loose, bark encased knots, or other timber defects need to be removed.
5. Weatherboards must be coated with exterior grade premium coating on all 4 sides in accordance with coating manufacturer specification.
6. Where weatherboards have an exposed bottom edge, the back of the boards should be cut with a 15° drip edge and the cut end should be coated up to 75-150mm up from the bottom edge.
7. Cavity closer/vermin proofing must be installed continuously around the bottom of the cavity.
8. Cavity closer/vermin proofing openings must be kept clear and unobstructed to maintain draining and venting of the cavity.
9. For windows and doors, head flashing stop ends must be in place.
10. Flashings at corners, doors, windows and wall intersections must be installed to prevent water from entering the cavity.

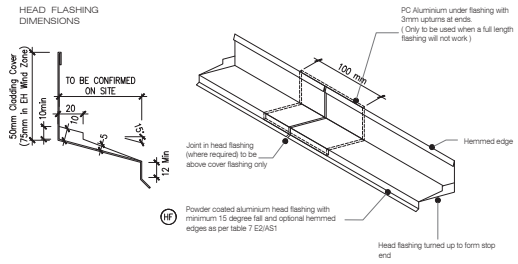

ONE PIECE PC ALUMINIUM HEAD FLASHING 15° SLOPE WITH 10mm min COVER TO JOINERY EXTEND 30mm min EITHER SIDE OF JOINERY WITH STOP ENDS

W6 / VS13 TYPICAL HEAD & FLASHING JOINT

SCALE : 1 / 2 @ A1, 1 / 4 @ A3

CAD REF : JSC 20CF VS10-15 - WINDOW DETAILS.dwg

JSC PREMIUM ARCHITECTURAL & BUILDING SOLUTIONS

EMAIL: TECHHELP@JSCTIMBER.CO.NZ
WEBSITE: WWW.JSCTIMBER.CO.NZ
Phone: 09 412 2812 (Technical)

CodeMark CMNZ30084

TYPE
VERTICAL SHIPLAP WB - 20MM CAVITY FIX FLEXIBLE UNDERLAY

NAME
WINDOW DETAILS - Aluminium Joinery

- TO BE READ IN CONJUNCTION WITH COMPLETE JSC VERTICLAD SYSTEM LITERATURE
- DETAILS MAY BE SUBJECT CHANGE WITHOUT NOTICE

DRAWING SCALE	ISSUE DATE
1:2 @ A1 1:4 @ A3	12/02/2024
DRAWING NUMBER	VERSION
JSC 20CF VS15	2.4

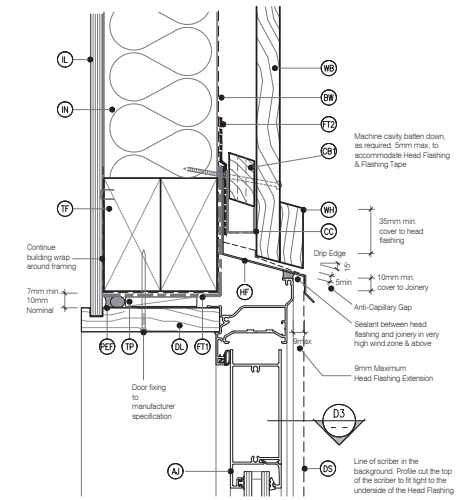

D1 VS20 DOOR HEAD - Vertical Shiplap WB

Cavity Fix - Aluminium Joinery - Double Glazing

SCALE 1:2 @ A1, 1:4 @ A3

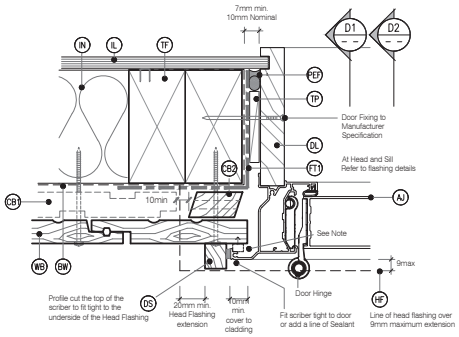

NOTE : No Scriber Option :
The Aluminium Joinery must sit hard against the back of the joinery flange and the timber weatherboards with a E.P.S Compressible bond breaker foam seal between

D3 VS22 DOOR JAMB - Vertical Shiplap WB

Cavity Fix - Aluminium Joinery - Double Glazing

SCALE 1:2 @ A1, 1:4 @ A3

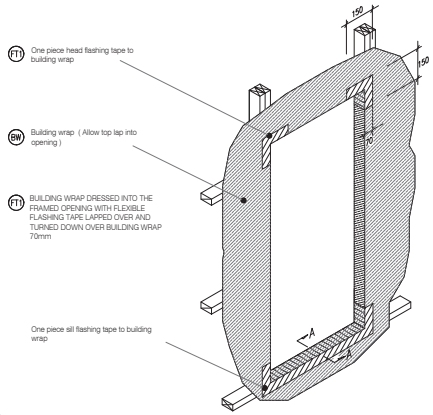

D4 VS23 TYPICAL DOOR OPENING (FLASHING TAPE)

SCALE : N.T.S

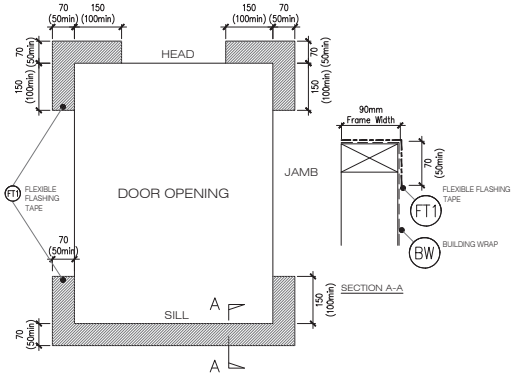

D5 VS23 FLEXIBLE BUILDING WRAP AT OPENING

SCALE : 1 / 5 @ A1, 1 / 10 @ A3

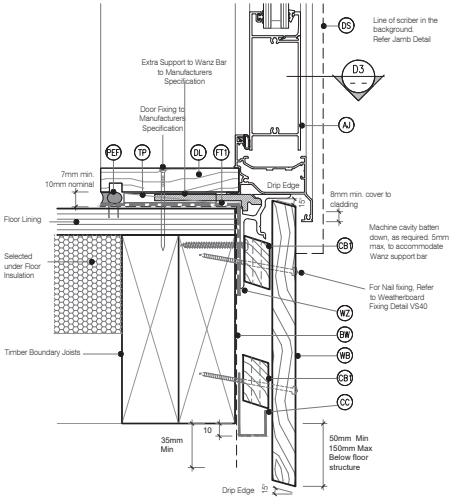

D2 VS21 DOOR SILL - Vertical Shiplap WB

Cavity Fix - Aluminium Joinery - Double Glazing

SCALE 1:2 @ A1, 1:4 @ A3

LEGEND :

- AJ — ALUMINIUM JOINERY: Selected double glazed aluminium joinery. To E2/AS1 9.1.10
- BW — BUILDING WRAP: Flexible Wall Underlay, As per NZBC E2/AS1 - Table 23, In extra high wind zones, Rigid Underlay required (9.1.7.2 E2/AS1)
- CB1 — CAVITY BATTEN - NON STRUCTURAL : Horizontally installed JSC-U 45mm x 20mm Radiata Pine H3.2 treated, both face castellated and 18° bevelled edges.
- CB2 — CAVITY BATTEN - NON STRUCTURAL : Vertically installed JSC-U 45mm x 20mm Radiata Pine H3.2 treated, both face castellated and 18° bevelled edges. Site machined to allow for flashing.
- CC — CAVITY CLOSURE: Cavity closure strip, positioned to give a 15mm Min drip edge to cladding
- DS — DOOR SCRIBER: Sealant to back of scriber and 75 x 3.15mm 316 Stainless Steel nail in 3mm predrilled hole.
- FT1 — FLASHING TAPE: Flashing tape over wrap 70mm (50 min) turn-down required in corners only. Refer to Fig. 72 of NZBC E2/AS1
- FT2 — FLEXIBLE FLASHING TAPE: Flexible flashing tape lapped over aluminum head flashing or 2nd layer of Building Wrap, taped joint to top of timber frame
- HF — HEAD FLASHING: Aluminium head flashing with minimum 15 degree fall, optional hemmed edges as per table 7 E2/AS1
- IL — INTERNAL LINING: Selected Internal Lining
- IN — INSULATION: Selected Insulation
- PEF — PEF ROD BACKING: Foam backing rod with sealant to cavity in Window perimeter that forms a waterproof air-seal. (Sealant 2:1 Ratio)
- TF — TIMBER FRAME: H1.2 min treated timber framing
- TP — TIMBER PACKER: Tan H3.2 Treated Packer
- WB — WEATHER BOARD: Selected JSC Vertical Shiplap Weatherboard
- DL — DOOR LINER: As Specified
- WB — WEATHER BOARD: JSC Vertical Shiplap Weatherboard
- WH — WEATHERHEAD: (OPTIONAL) Selected JSC Horizontal batten above meter box as necessary to suit profile, shaped to shed water, sealant to back of head scriber
- WZ — WANZ SUPPORT: Provide window support as required by joinery manufacturer

GENERAL NOTES :

1. JSC VertiClad System must be installed by a suitably qualified and experienced trade person. Where Restricted Building Work (RBW) applied the installer shall be a Licensed Building Practitioner (LBP) or supervised by LBP.
2. Weatherboards must be dry and free of any contamination.
3. Board lengths must be optimised prior to the installation to avoid any unnecessary wastage and joints.
4. Any loose, bark encased knots, or other timber defects need to be removed.
5. Weatherboards must be coated with exterior grade premium coating on all 4 sides in accordance with coating manufacturer specification.
6. Where weatherboards have an exposed bottom edge, the back of the boards should be cut with a 15° drip edge and the cut end should be coated up to 75-150mm up from the bottom edge.
7. Cavity closer/vermin proofing must be installed continuously around the bottom of the cavity.
8. Cavity closer/vermin proofing openings must be kept clear and unobstructed to maintain draining and venting of the cavity.
9. For windows and doors, head flashing stop ends must be in place.
10. Flashings at corners, doors, windows and wall intersections must be installed to prevent water from entering the cavity.

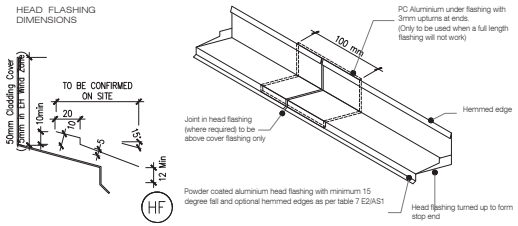

ONE PIECE PC ALUMINIUM HEAD FLASHING 15° SLOPE WITH 10mm minimum COVER TO JOINERY EXTEND 30mm min EITHER SIDE OF JOINERY WITH STOP ENDS

D6 VS23 TYPICAL HEAD & FLASHING JOINT

SCALE : 1 / 2 @ A1, 1 / 4 @ A3

CAD REF JSC 20CF VS20-25 - DOOR DETAILS.dwg

JSC PREMIUM ARCHITECTURAL & BUILDING SOLUTIONS

EMAIL: TECHHELP@JSCTIMBER.CO.NZ
WEBSITE: WWW.JSCTIMBER.CO.NZ
Phone: 09 412 2812 (Technical)

CodeMark CMNZ30084

TYPE
VERTICAL SHIPLAP WB - 20MM CAVITY FIX FLEXIBLE UNDERLAY

NAME
DOOR DETAILS - Aluminimum Joinery

- TO BE READ IN CONJUNCTION WITH COMPLETE JSC VERTICLAD SYSTEM LITERATURE
- DETAILS MAY BE SUBJECT CHANGE WITHOUT NOTICE

DRAWING SCALE	ISSUE DATE
1:2 @ A1 1:4 @ A3	12/02/2024
DRAWING NUMBER	**VERSION**
JSC 20CF VS25	2.4

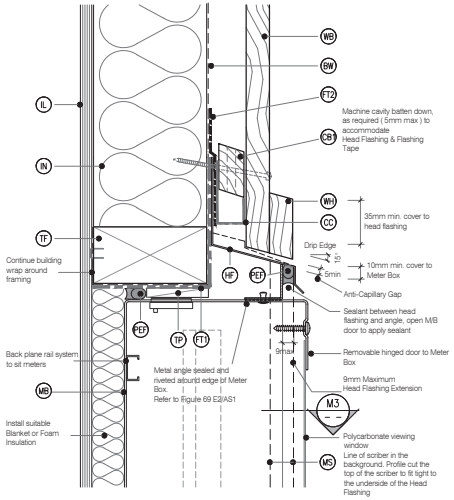

M1 VS30 METER BOX HEAD

Cavity Fix - Vertical Shiplap WB

SCALE 1:2 @ A1, 1:4 @ A3

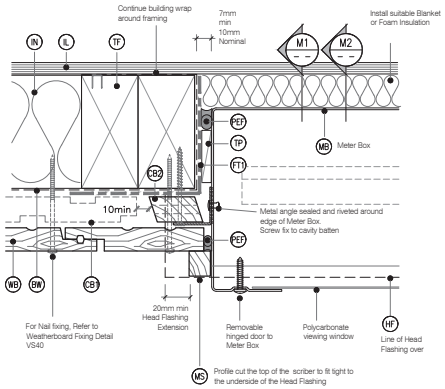

M3 VS32 METER BOX JAMB

Cavity Fix - Vertical Shiplap WB

SCALE 1:2 @ A1, 1:4 @ A3

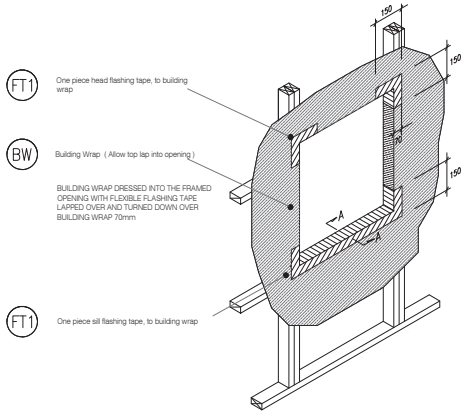

M4 VS33 TYPICAL METER BOX OPENING (FLASHING TAPE)

SCALE : N.T.S

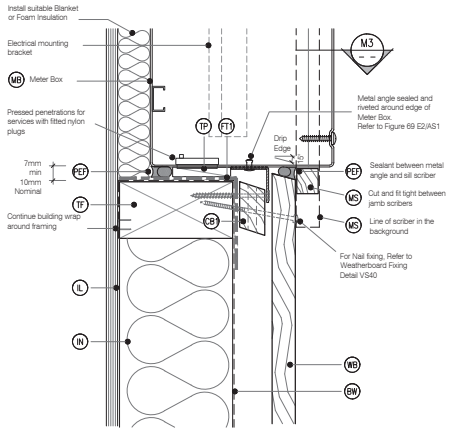

M2 VS31 METER BOX SILL

Cavity Fix - Vertical Shiplap WB

SCALE 1:2 @ A1, 1:4 @ A3

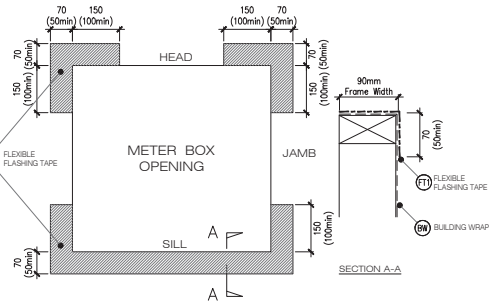

M5 VS33 FLEXIBLE BUILDING WRAP AT OPENING

SCALE : 1 / 5 @ A1, 1 / 10 @ A3

LEGEND:

- (BW) BUILDING WRAP: Flexible Wall Underlay, As per NZBC E2/AS1 - Table 23, In extra high wind zones, Rigid Underlay required (9.1.7.2 E2/AS1)
- (CB1) CAVITY BATTEN - NON STRUCTURAL : Horizontally installed JSC-U 45mm x 20mm Radiata Pine H3.2 treated, both face castellated and 18° bevelled edges.
- (CB2) CAVITY BATTEN - NON STRUCTURAL : Vertically installed JSC-U 45mm x 20mm Radiata Pine H3.2 treated, both face castellated and 18° bevelled edges. Site machined to allow for flashing.
- (CC) CAVITY CLOSURE: Cavity closure strip, positioned to give a 15mm minimum drip edge to cladding
- (FT1) FLASHING TAPE: Flashing tape over wrap 70mm (50 min) turn-down required in corners only. Refer to Fig. 72 of NZBC E2/AS1
- (FT2) FLEXIBLE FLASHING TAPE: Flexible flashing tape lapped over aluminum head flashing or 2nd layer of Building Wrap, taped joint to top of timber frame
- (HF) HEAD FLASHING: Aluminium head flashing with minimum 15 degree fall, optional hemmed edges as per table 7 E2/AS1
- (IL) INTERNAL LINING: Selected Internal Lining
- (IN) INSULATION: Selected Insulation
- (PEF) PEF ROD BACKING: Foam backing rod with sealant to cavity in Window perimeter that forms a waterproof air-seal. (Sealant 2:1 Ratio)
- (MB) METER BOX: Electrical meter box, with removable hinged door and polycarbonate viewing window
- (MS) METER BOX SCRIBER: Sealant to back of scriber and 75 x 3.15mm 316 Stainless Steel nail in 3mm predrilled hole.
- (TF) TIMBER FRAME: H1.2 min treated timber framing
- (TP) TIMBER PACKER: Tan H3.2 Treated Packer
- (WB) WEATHER BOARD: Selected JSC Vertical Shiplap Weatherboard
- (WL) WINDOW LINER: As Specified
- (WH) WEATHERHEAD: (OPTIONAL) Selected JSC Horizontal batten above meter box as necessary to suit profile, shaped to shed water, sealant to back of head scriber

GENERAL NOTES:

1. JSC VertiClad System must be installed by a suitably qualified and experienced trade person. Where Restricted Building Work (RBW) applied the installer shall be a Licensed Building Practitioner (LBP) or supervised by LBP.
2. Weatherboards must be dry and free of any contamination.
3. Board lengths must be optimised prior to the installation to avoid any unnecessary wastage and joints.
4. Any loose, bark encased knots, or other timber defects need to be removed.
5. Weatherboards must be coated with exterior grade premium coating on all 4 sides in accordance with coating manufacturer specification.
6. Where weatherboards have an exposed bottom edge, the back of the boards should be cut with a 15° drip edge and the cut end should be coated up to 75-150mm up from the bottom edge.
7. Cavity closer/vermin proofing must be installed continuously around the bottom of the cavity.
8. Cavity closer/vermin proofing openings must be kept clear and unobstructed to maintain draining and venting of the cavity.
9. For windows and doors, head flashing stop ends must be in place.
10. Flashings at corners, doors, windows and wall intersections must be installed to prevent water from entering the cavity.

HEAD FLASHING DIMENSIONS

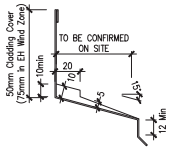

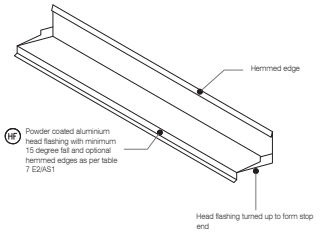

ONE PIECE PC ALUMINIUM HEAD FLASHING 15° SLOPE WITH 10mm min COVER TO JOINERY EXTEND 30mm min EITHER SIDE OF JOINERY WITH STOP ENDS

M6 VS33 TYPICAL HEAD & FLASHING JOINT

SCALE : 1 / 2 @ A1, 1 / 4 @ A3

CAD REF JSC 20CF VS35 - METER BOX.dwg

JSC PREMIUM ARCHITECTURAL & BUILDING SOLUTIONS

EMAIL: TECHHELP@JSCTIMBER.CO.NZ
WEBSITE: WWW.JSCTIMBER.CO.NZ
Phone: 09 412 2812 (Technical)

CodeMark CMNZ30084

TYPE: VERTICAL SHIPLAP WB - 20MM CAVITY FIX FLEXIBLE UNDERLAY

NAME: METER BOX DETAILS

- TO BE READ IN CONJUNCTION WITH COMPLETE JSC VERTICLAD SYSTEM LITERATURE
- DETAILS MAY BE SUBJECT CHANGE WITHOUT NOTICE

DRAWING SCALE	ISSUE DATE
1:2 @ A1 1:4 @ A3	12/02/2024
DRAWING NUMBER	VERSION
JSC 20CF VS35	2.4

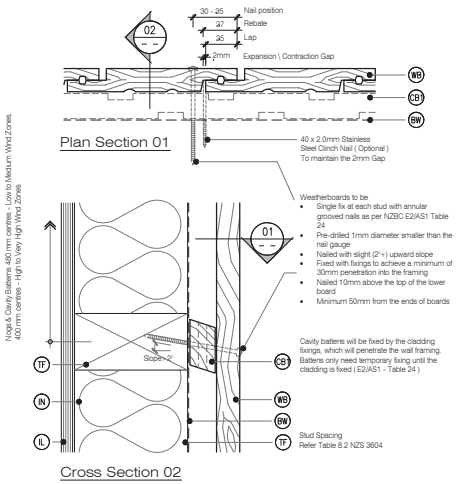

C1 VS40 WEATHERBOARD FIXING
Cavity Fix - Vertical Shiplap WB
SCALE 1:2 @ A1, 1:4 @ A3

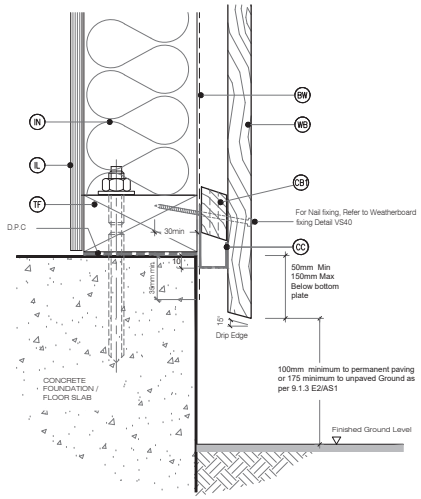

C3 VS42 BASE OF WALL, CONCRETE
Cavity Fix - Vertical Shiplap WB
SCALE 1:2 @ A1, 1:4 @ A3

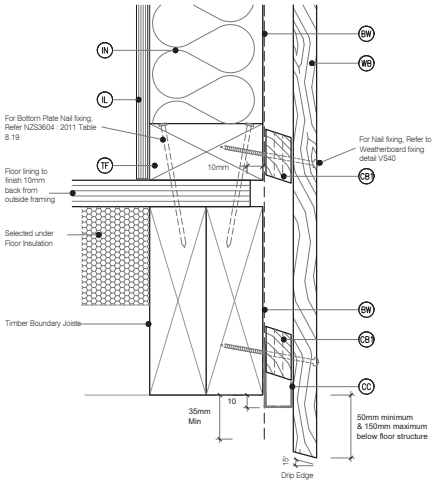

C4 VS43 BASE OF WALL, TIMBER
Cavity Fix - Vertical Shiplap WB
SCALE 1:2 @ A1, 1:4 @ A3

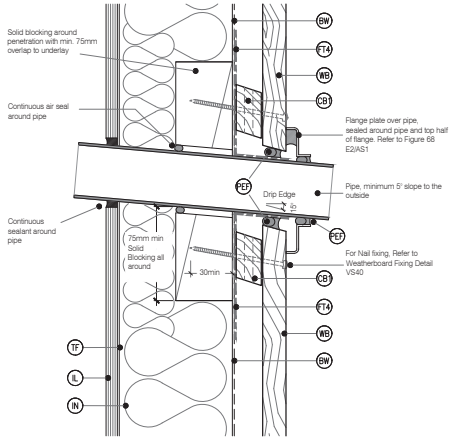

C5 VS44 PIPE PENETRATION
Cavity Fix - Vertical Shiplap WB
SCALE 1:2 @ A1, 1:4 @ A3

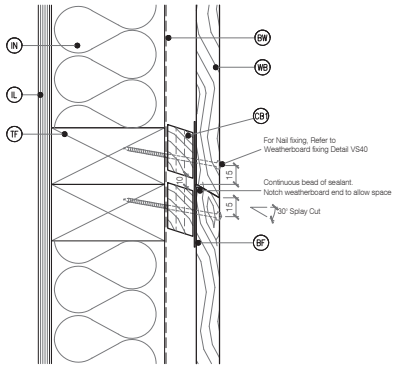

C2 VS41 WEATHERBOARD SCARF JOINT
Cavity Fix - Vertical Shiplap WB
SCALE 1:2 @ A1, 1:4 @ A3

LEGEND:

- BF — BACK FLASHING: Minimum 100mm Polypropylene or PVC rear flashing to provide 50mm cover past the scarf joint on each side
- BW — BUILDING WRAP: Flexible Wall Underlay, as per NZBC E2/AS1 - Table 23. In extra high wind zones, Rigid Underlay required (9.1.7.2 E2/AS1)
- CB1 — CAVITY BATTEN - NON STRUCTURAL : Horizontally installed JSC-U 45mm x 20mm Radiata Pine H3.2 treated, both face castellated and 18° bevelled edges.
- CC — CAVITY CLOSURE: Cavity closure strip, positioned to give a 15mm minimum drip edge to cladding
- FT4 — FLEXIBLE FLASHING TAPE: Flexible flashing tape lapped into corner, Refer NZBC E2/AS1 4.3.11 Flashing tape is recommended due to movement that may occur in corners. Not required by E2/AS1
- IL — INTERNAL LINING: Selected Internal Lining
- IN — INSULATION: Selected Insulation
- TF — TIMBER FRAME: H1.2 min treated timber framing
- WB — WEATHERBOARD: Selected JSC Vertical Shiplap Weatherboard

GENERAL NOTES:

1. JSC VertiClad System must be installed by a suitably qualified and experienced trade person. Where Restricted Building Work (RBW) applied the installer shall be a Licensed Building Practitioner (LBP) or supervised by LBP.
2. Weatherboards must be dry and free of any contamination.
3. Board lengths must be optimised prior to the installation to avoid any unnecessary wastage and joints.
4. Any loose, bark encased knots, or other timber defects need to be removed.
5. Weatherboards must be coated with exterior grade premium coating on all 4 sides in accordance with coating manufacturer specification.
6. Where weatherboards have an exposed bottom edge, the back of the boards should be cut with a 15° drip edge and the cut end should be coated up to 75-150mm up from the bottom edge.
7. Cavity closer/vermin proofing must be installed continuously around the bottom of the cavity.
8. Cavity closer/vermin proofing openings must be kept clear and unobstructed to maintain draining and venting of the cavity.
9. For windows and doors, head flashing stop ends must be in place.
10. Flashings at corners, doors, windows and wall intersections must be installed to prevent water from entering the cavity.

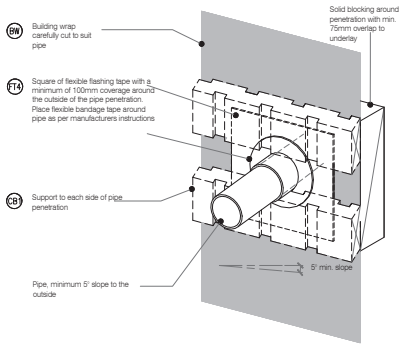

C6 VS45 3D PIPE PENETRATION
Cavity Fix - Vertical Shiplap WB
SCALE : N.T.S

JSC PREMIUM ARCHITECTURAL & BUILDING SOLUTIONS
EMAIL: TECHHELP@JSCTIMBER.CO.NZ
WEBSITE: WWW.JSCTIMBER.CO.NZ
Phone: 09 412 2812 (Technical)

CodeMark CMNZ30084

TYPE
VERTICAL SHIPLAP WB - 20MM CAVITY FIX FLEXIBLE UNDERLAY

NAME
GENERAL DETAILS 01

- TO BE READ IN CONJUNCTION WITH COMPLETE JSC VERTICLAD SYSTEM LITERATURE
- DETAILS MAY BE SUBJECT CHANGE WITHOUT NOTICE

DRAWING SCALE	ISSUE DATE
1:2 @ A1 1:4 @ A3	12/02/2024
DRAWING NUMBER	VERSION
JSC 20CF VS46	2.4

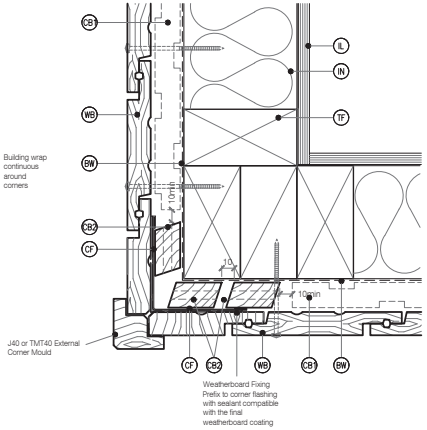

C10 VS50 EXTERNAL CORNER - J40
Cavity Fix - Vertical Shiplap WB
SCALE 1:2 @ A1, 1:4 @ A3

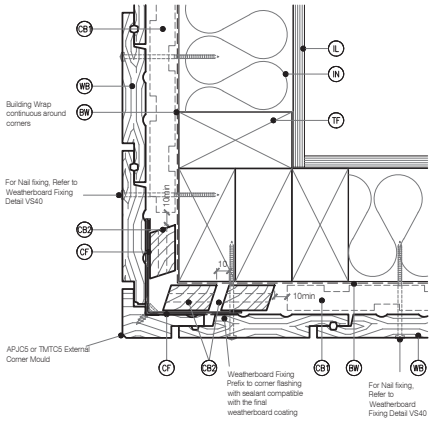

C12 VS52 EXTERNAL CORNER - APJC5
Cavity Fix - Vertical Shiplap WB
SCALE 1:2 @ A1, 1:4 @ A3

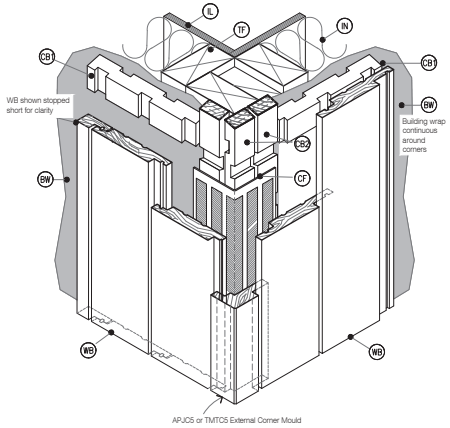

C13 VS53 3D EXTERNAL CORNER - APJC5
Cavity Fix - Vertical Shiplap WB
SCALE : N.T.S

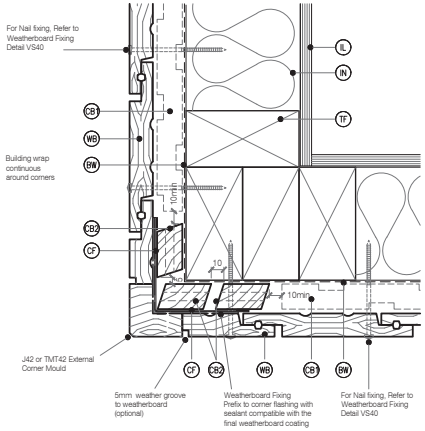

C14 VS54 EXTERNAL CORNER J42
Cavity Fix - Vertical Shiplap WB
SCALE 1:2 @ A1, 1:4 @ A3

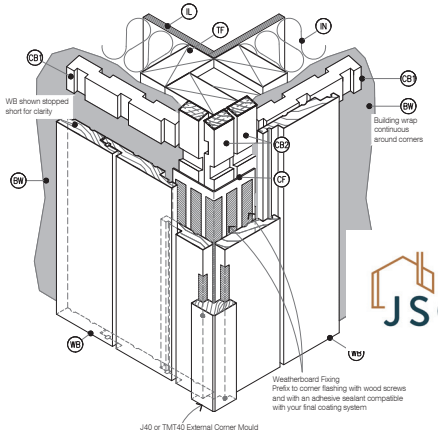

C11 VS51 3D EXTERNAL CORNER - J40
Cavity Fix - Vertical Shiplap WB
SCALE : N.T.S

LEGEND:

- **BW** BUILDING WRAP: Flexible Wall Underlay, As per NZBC E2/AS1 - Table 23, In extra high wind zones, Rigid Underlay required (9.1.7.2 E2/AS1)
- **CF** CORNER FLASHING: Aluminium, PVC or Stainless Steel corner flashing. Refer NZBC E2/AS1 Section 4.3 "Acceptable flashing materials" Minimum Flashing Size (mm) as per NZBC E2/AS1 Section 4.5.1:

FLASHING TYPE	L,M,H & VH Wind Zones	EH Wind Zones
Hemmed	50X50	75X75
Unhemmed	75x75	100x100

- **PEF** PEF ROD BACKING: Foam backing rod with sealant to perimeter that forms a waterproof air-seal. (Sealant 2:1 Ratio)
- **CB1** CAVITY BATTEN - NON STRUCTURAL : Horizontally installed JSC-U 45mm x 20mm Radiata Pine H3.2 treated, both face castellated and 18° bevelled edges.
- **CB2** CAVITY BATTEN - NON STRUCTURAL : Vertically installed JSC-U 45mm x 20mm Radiata Pine H3.2 treated, both face castellated and 18° bevelled edges. Site machined to allow for flashing.
- **IN** INSULATION: Selected Insulation
- **TF** TIMBER FRAME: H1.2 min treated timber framing
- **IL** INTERNAL LINING: Selected Internal Lining
- **WB** WEATHERBOARD: Selected JSC Vertical Shiplap Weatherboard

GENERAL NOTES:

lled by a
ade
/ork
ı Licensed
sed by

e of any
contamination.

3. Board lengths must be optimised prior to the installation to avoid any unnecessary wastage and joints.
4. Any loose, bark encased knots, or other timber defects need to be removed.
5. CodeMark CMNZ30084 vith exterior ides in cturer specification.
6. Where weatherboards have an exposed bottom edge, the back of the boards should be cut with a 15° drip edge and the cut end should be coated up to 75-150mm up from the bottom edge.
7. Cavity closer/vermin proofing must be installed continuously around the bottom of the cavity.
8. Cavity closer/vermin proofing openings must be kept clear and unobstructed to maintain draining and venting of the cavity.
9. For windows and doors, head flashing stop ends must be in place.
10. Flashings at corners, doors, windows and wall intersections must be installed to prevent water from entering the cavity.

JSC PREMIUM ARCHITECTURAL & BUILDING SOLUTIONS

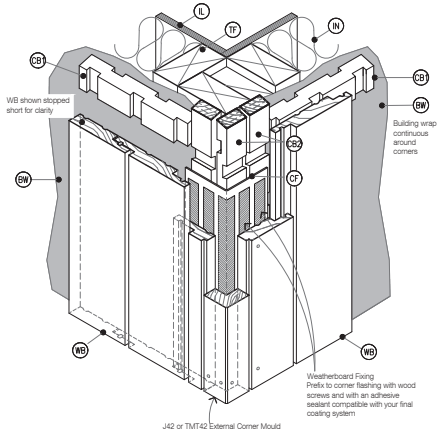

C15 VS55 3D EXTERNAL CORNER - J42 .
Cavity Fix - Vertical Shiplap WB
SCALE : N.T.S

JSC PREMIUM ARCHITECTURAL & BUILDING SOLUTIONS
EMAIL: TECHHELP@JSCTIMBER.CO.NZ
WEBSITE: WWW.JSCTIMBER.CO.NZ
Phone: 09 412 2812 (Technical)

CodeMark CMNZ30084

TYPE
VERTICAL SHIPLAP WB - 20MM CAVITY FIX FLEXIBLE UNDERLAY

NAME
GENERAL DETAILS 02

- TO BE READ IN CONJUNCTION WITH COMPLETE JSC VERTICLAD SYSTEM LITERATURE
- DETAILS MAY BE SUBJECT CHANGE WITHOUT NOTICE

DRAWING SCALE	ISSUE DATE
1:2 @ A1 1:4 @ A3	12/02/2024
DRAWING NUMBER	VERSION
JSC 20CF VS56	2.4

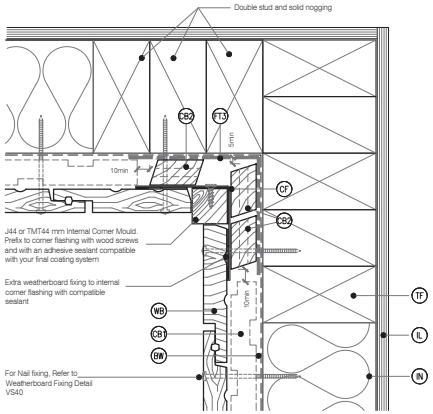

DETAIL NOTES :

1. Flashing tape is recommended due to movement that may occur in corners but it is not required by E2/AS1
2. Aluminium extrusion must not be continuous over solid floor joists.

C16 VS60 INTERNAL CORNER - J44
Cavity Fix - Vertical Shiplap WB
SCALE 1:2 @ A1, 1:4 @ A3

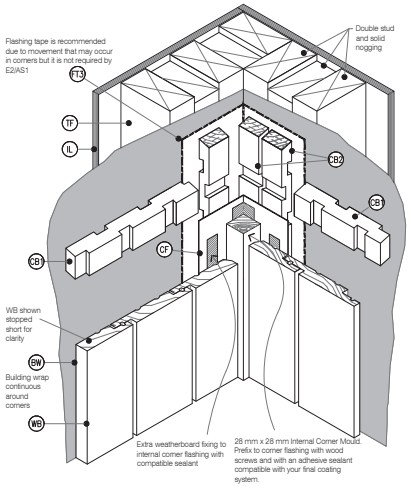

C17 VS61 3D INTERNAL CORNER - J44
Cavity Fix - Vertical Shiplap WB
SCALE : N.T.S

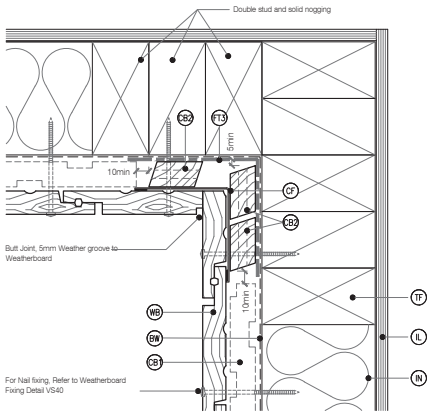

DETAIL NOTES :

1. Flashing tape is recommended due to movement that may occur in corners but it is not required by E2/AS1
2. Aluminium extrusion must not be continuous over solid floor joists.

C18 VS62 INTERNAL CORNER
Cavity Fix - Vertical Shiplap WB
SCALE 1:2 @ A1, 1:4 @ A3

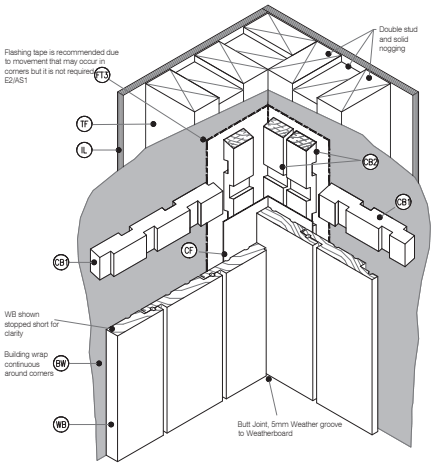

C19 VS63 3D INTERNAL CORNER
Cavity Fix - Vertical Shiplap WB
SCALE : N.T.S

LEGEND:

BW BUILDING WRAP: Flexible Wall Underlay, As per NZBC E2/AS1 - Table 23, In extra high wind zones, Rigid Underlay required (9.1.7.2 E2/AS1)

CB1 CAVITY BATTEN - NON STRUCTURAL : Horizontally installed JSC-U 45mm x 20mm Radiata Pine H3.2 treated, both face castellated and 18° bevelled edges.

CB2 CAVITY BATTEN - NON STRUCTURAL : Vertically installed JSC-U 45mm x 20mm Radiata Pine H3.2 treated, both face castellated and 18° bevelled edges. Site machined to allow for flashing.

CF CORNER FLASHING: Aluminium, PVC or Stainless Steel corner flashing. Refer NZBC E2/AS1 Section 4.3 "Acceptable flashing materials" Minimum Flashing Size (mm) as per NZBC E2/AS1 Section 4.5.1:

FLASHING TYPE	L,M,H & VH Wind Zones	EH Wind Zones
Hemmed	50X50	75X75
Unhemmed	75x75	100x100

WB WEATHERBOARD: Selected JSC Vertical Shiplap Weatherboard

FT3 FLEXIBLE FLASHING TAPE: Flexible flashing tape lapped into corner, Refer NZBC E2/AS1 4.3.11 Flashing tape is recommended due to movement that may occur in corners. Not required by E2/AS1

IL INTERNAL LINING: Selected Internal Lining

IN INSULATION: Selected Insulation

TF TIMBER FRAME: H1.2 min treated timber framing

GENERAL NOTES:

1. JSC VertiClad System must be installed by a suitably qualified and experienced trade person. Where Restricted Building Work (RBW) applied the installer shall be a Licensed Building Practitioner (LBP) or supervised by LBP.
2. Weatherboards must be dry and free of any contamination.
3. Board lengths must be optimised prior to the installation to avoid any unnecessary wastage and joints.
4. Any loose, bark encased knots, or other timber defects need to be removed.
5. Weatherboards must be coated with exterior grade premium coating on all 4 sides in accordance with coating manufacturer specification.
6. Where weatherboards have an exposed bottom edge, the back of the boards should be cut with a 15° drip edge and the cut end should be coated up to 75-150mm up from the bottom edge.
7. Cavity closer/vermin proofing must be installed continuously around the bottom of the cavity.
8. Cavity closer/vermin proofing openings must be kept clear and unobstructed to maintain draining and venting of the cavity.
9. For windows and doors, head flashing stop ends must be in place.
10. Flashings at corners, doors, windows and wall intersections must be installed to prevent water from entering the cavity.

JSC PREMIUM ARCHITECTURAL & BUILDING SOLUTIONS

EMAIL: TECHHELP@JSCTIMBER.CO.NZ
WEBSITE: WWW.JSCTIMBER.CO.NZ
Phone: 09 412 2812 (Technical)

CodeMark
CMNZ30084

TYPE
VERTICAL SHIPLAP WB - 20MM CAVITY FIX FLEXIBLE UNDERLAY

NAME
GENERAL DETAILS 03

- TO BE READ IN CONJUNCTION WITH COMPLETE JSC VERTICLAD SYSTEM LITERATURE
- DETAILS MAY BE SUBJECT CHANGE WITHOUT NOTICE

DRAWING SCALE	ISSUE DATE
1:2 @ A1 1:4 @ A3	12/02/2024
DRAWING NUMBER	**VERSION**
JSC 20CF VS66	2.4

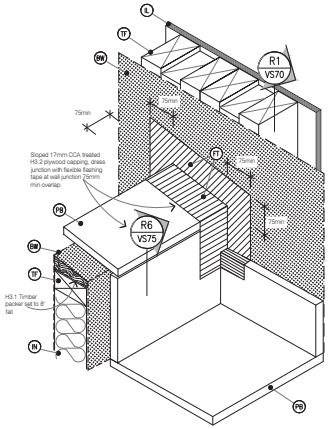

STAGE ONE

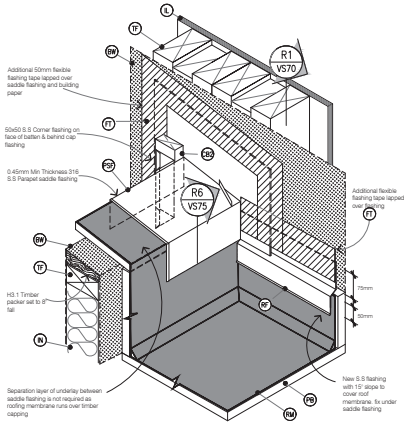

STAGE TWO

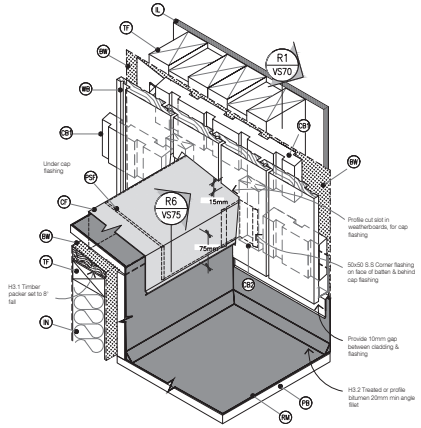

STAGE THREE

R2 VS71

DECK OR ROOF MEMBRANE PARAPET SADDLE FLASHING

Cavity Fix - Vertical Shiplap WB

SCALE 1:5 @ A1, 1:10 @ A3

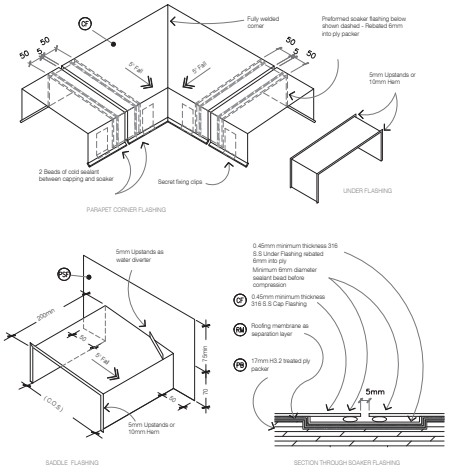

R5 VS74

TYPICAL PARAPET CAPPING JOINT DETAILS

Cavity Fix - Vertical Shiplap WB

SCALE 1:5 @ A1, 1:10 @ A3

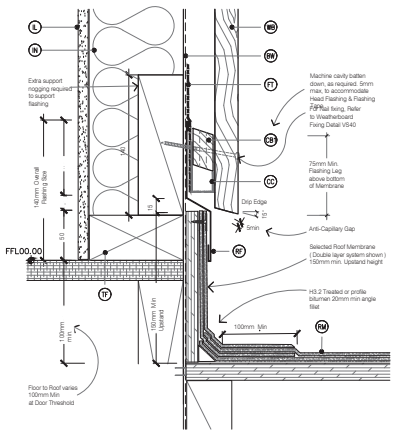

R1 VS70

BASE OF WALL, MEMBRANE ROOF

Cavity Fix - Vertical Shiplap WB

SCALE 1:2.5 @ A1, 1:5 @ A3

LEGEND:

- (BW) BUILDING WRAP: Flexible Wall Underlay, As per NZBC E2/AS1 - Table 23, In extra high wind zones, Rigid Underlay required (9.1.7.2 E2/AS1)
- (CB1) CAVITY BATTEN - NON STRUCTURAL : Horizontally installed JSC-U 45mm x 20mm Radiata Pine H3.2 treated, both face castellated and 18° bevelled edges.
- (CB2) CAVITY BATTEN - NON STRUCTURAL : Vertically installed JSC-U 45mm x 20mm Radiata Pine H3.2 treated, both face castellated and 18° bevelled edges. Site machined to allow for flashing.
- (CC) CAVITY CLOSURE: Cavity closure strip, positioned to give a 15mm Min drip edge to cladding
- (CF) CAP FLASHING: Continuous parapet flashing. Materials as per E2/AS1 4.3 + Figure 9 & Table 7
- (FT) FLASHING TAPE: As per E2/AS1 4.3.11
- (IL) INTERNAL LINING: Selected Internal Lining
- (IN) INSULATION: Selected Insulation
- (PSF) PARAPET SADDLE FLASHING: Materials as per E2/AS1 4.0, refer E2/AS1 Figure 11 & 12 . Typically 0.45mm Min 316 Stainless Steel. Refer Table 20 & Table 21 for Comparability of Materials in Contact
- (PB) PLYWOOD BACKING: 17mm CCA treated H3.2 grade plywood substrate
- (RM) ROOFING MEMBRANE: Selected System on 17mm CCA treated H3.2 grade plywood glued and screwed to Rafters. Roof Membrane requires 400mm solid block support each way & solid support to all sheet edges
- (TF) TIMBER FRAME: H1.2 min treated timber framing
- (WB) WEATHERBOARD: Selected JSC Vertical Shiplap Weatherboard

GENERAL NOTES:

1. JSC VertiClad System must be installed by a suitably qualified and experienced trade person. Where Restricted Building Work (RBW) applied the installer shall be a Licensed Building Practitioner (LBP) or supervised by LBP.
2. Weatherboards must be dry and free of any contamination.
3. Board lengths must be optimised prior to the installation to avoid any unnecessary wastage and joints.
4. Any loose, bark encased knots, or other timber defects need to be removed.
5. Weatherboards must be coated with exterior grade premium coating on all 4 sides in accordance with coating manufacturer specification.
6. Where weatherboards have an exposed bottom edge, the back of the boards should be cut with a 15° drip edge and the cut end should be coated up to 75-150mm up from the bottom edge.
7. Cavity closer/vermin proofing must be installed continuously around the bottom of the cavity.
8. Cavity closer/vermin proofing openings must be kept clear and unobstructed to maintain draining and venting of the cavity.
9. For windows and doors, head flashing stop ends must be in place.
10. Flashings at corners, doors, windows and wall intersections must be installed to prevent water from entering the cavity.

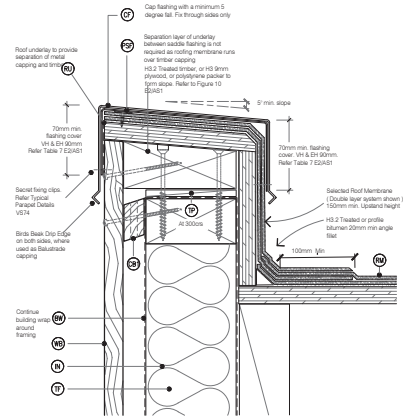

R6 VS75

PARAPET SECTION TO MEMBRANE ROOF

Cavity Fix - Vertical Shiplap WB

SCALE 1:2.5 @ A1, 1:5 @ A3

CAD REF: JSC 20CF VS70-76 - GENERAL DETAILS 04.dwg

JSC PREMIUM ARCHITECTURAL & BUILDING SOLUTIONS

EMAIL: TECHHELP@JSCTIMBER.CO.NZ
WEBSITE: WWW.JSCTIMBER.CO.NZ
Phone: 09 412 2812 (Technical)

CodeMark CMNZ30084

TYPE: VERTICAL SHIPLAP WB - 20MM CAVITY FIX FLEXIBLE UNDERLAY

NAME: GENERAL DETAILS 04

- TO BE READ IN CONJUNCTION WITH COMPLETE JSC VERTICLAD SYSTEM LITERATURE
- DETAILS MAY BE SUBJECT CHANGE WITHOUT NOTICE

DRAWING SCALE	ISSUE DATE
1:2.5 @ A1 1:5 @ A3	12/02/2024
DRAWING NUMBER	VERSION
JSC 20CF VS76	2.4

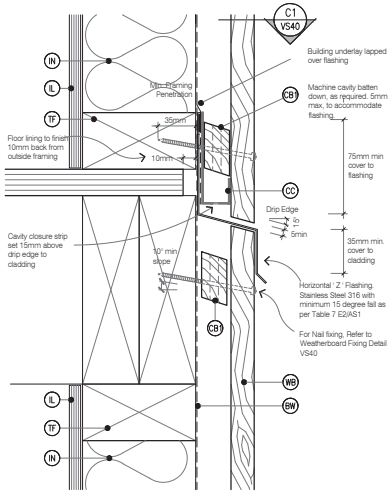

C17 VS80 DRAINED INTER-STOREY JOINT
Cavity Fix - Vertical Shiplap WB
SCALE 1:2 @ A1, 1:4 @ A3

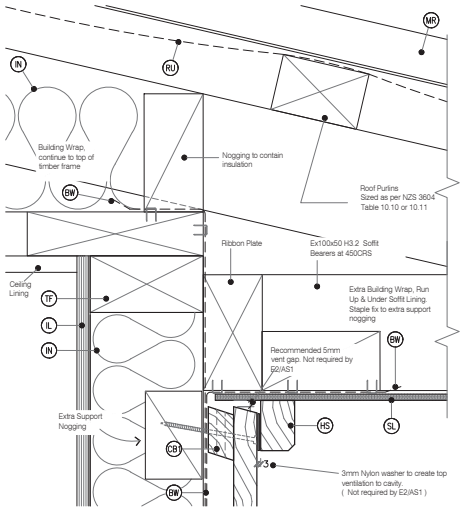

C18 VS82 SOFFIT DETAIL AT WALL
Cavity Fix - Vertical Shiplap WB
SCALE 1:2 @ A1, 1:4 @ A3

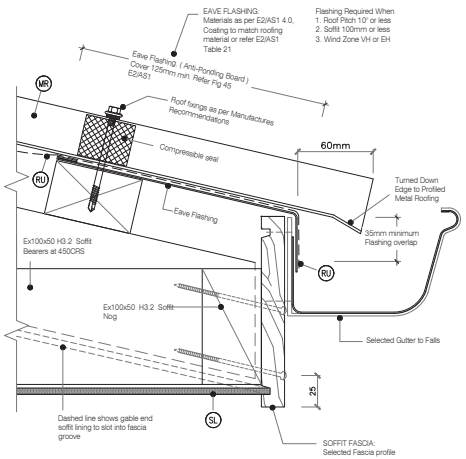

C19 VS83 SOFFIT DETAIL AT FASCIA
Cavity Fix - Vertical Shiplap WB
SCALE 1:2 @ A1, 1:4 @ A3

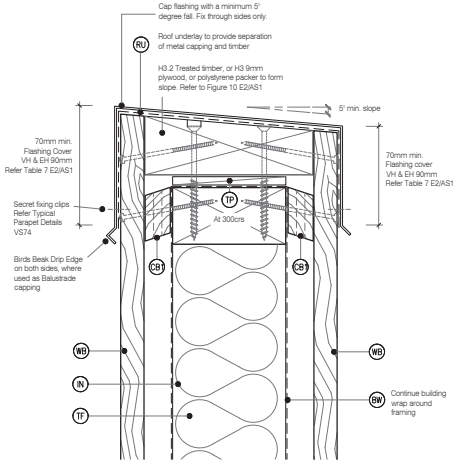

C21 VS84 BALUSTARDE CAPPING OR PARAPET DETAIL
Cavity Fix - Vertical Shiplap WB
SCALE 1:2 @ A1, 1:4 @ A3

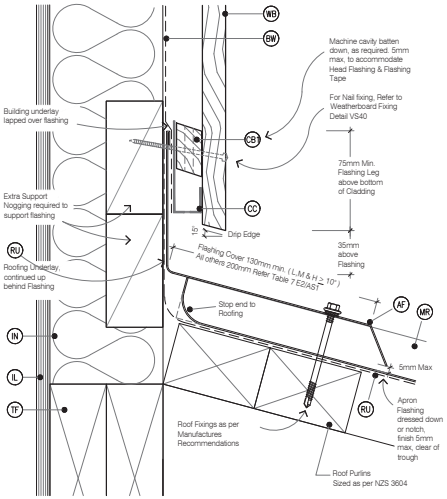

C18 VS81 APRON FLASHING ROOF TO WALL JUNCTION
Cavity Fix - Vertical Shiplap WB
SCALE 1:2 @ A1, 1:4 @ A3

LEGEND:

- (AF) APRON FLASHING: Materials as per E2/AS1 4.0, Coating to match roofing material or refer E2/AS1 Table 21. Flashing Cover 130mm min. (L,M & H ≥ 10°) All others 200mm Refer Table 7 E2/AS1
- (BW) BUILDING WRAP: Flexible Wall Underlay, As per NZBC E2/AS1 - Table 23, In extra high wind zones, Ridgid Underlay required (9.1.7.2 E2/AS1)
- (CB1) CAVITY BATTEN - NON STRUCTURAL : Horizontally installed JSC-U 45mm x 20mm Radiata Pine H3.2 treated, both face castellated and 18° bevelled edges.
- (CC) CAVITY CLOSURE: Cavity closure strip, positioned to give a 15mm Min drip edge to cladding
- (IL) INTERNAL LINING: Selected Internal Lining
- (IN) INSULATION: Selected Insulation
- (HS) HEAD SOFFIT SCRIBER: JSC 27 mm x 40 mm Fix with 75 x 3.15mm 316 S.S nail in 2.5mm predrilled hole
- (MR) METAL ROOFING : Selected Metal Roofing
- (SL) SOFFIT LINING: JSC Soffit Lining
- (TF) TIMBER FRAME: H1.2 min treated timber framing
- (TP) TIMBER PACKER: Cant Strip, H3.2 Treated at 300crs to allow ventilation over the top of the wall.
- (RU) ROOFING UNDERLAY: Selected Roofing Underlay As Per AS/AZS4200 with Mesh or Self Supported
- (WB) WEATHERBOARD: Selected JSC Vertical Shiplap Weatherboard

GENERAL NOTES:

1. JSC VertiClad System must be installed by a suitably qualified and experienced trade person. Where Restricted Building Work (RBW) applied the installer shall be a Licensed Building Practitioner (LBP) or supervised by LBP.
2. Weatherboards must be dry and free of any contamination.
3. Board lengths must be optimised prior to the installation to avoid any unnecessary wastage and joints.
4. Any loose, bark encased knots, or other timber defects need to be removed.
5. Weatherboards must be coated with exterior grade premium coating on all 4 sides in accordance with coating manufacturer specification.
6. Where weatherboards have an exposed bottom edge, the back of the boards should be cut with a 15° drip edge and the cut end should be coated up to 75-150mm up from the bottom edge.
7. Cavity closer/vermin proofing must be installed continuously around the bottom of the cavity.
8. Cavity closer/vermin proofing openings must be kept clear and unobstructed to maintain draining and venting of the cavity.
9. For windows and doors, head flashing stop ends must be in place.
10. Flashings at corners, doors, windows and wall intersections must be installed to prevent water from entering the cavity.

JSC PREMIUM ARCHITECTURAL & BUILDING SOLUTIONS

EMAIL: TECHHELP@JSCTIMBER.CO.NZ
WEBSITE: WWW.JSCTIMBER.CO.NZ
Phone: 09 412 2812 (Technical)

CodeMark
CMNZ30084

TYPE
VERTICAL SHIPLAP WB - 20MM CAVITY FIX FLEXIBLE UNDERLAY

NAME
GENERAL DETAILS 05

- TO BE READ IN CONJUNCTION WITH COMPLETE JSC VERTICLAD SYSTEM LITERATURE
- DETAILS MAY BE SUBJECT CHANGE WITHOUT NOTICE

DRAWING SCALE	ISSUE DATE
1:2 @ A1 1:4 @ A3	12/02/2024
DRAWING NUMBER	VERSION
JSC 20CF VS86	2.4